VMS Software

VSI DECnet-Plus Problem Solving

Operating System and Version: VSI OpenVMS IA-64 Version 8.4-1H1 or higher
VSI OpenVMS Alpha Version 8.4-2L1 or higher

VMS Software, Inc. (VSI)
Boston, Massachusetts, USA

VSI DECnet-Plus Problem Solving

VMS Software

Copyright © 2026 VMS Software, Inc. (VSI), Boston, Massachusetts, USA

Legal Notice

Confidential computer software. Valid license from VSI required for possession, use or copying. Consistent with FAR 12.211 and 12.212, Commercial Computer Software, Computer Software Documentation, and Technical Data for Commercial Items are licensed to the U.S. Government under vendor's standard commercial license.

The information contained herein is subject to change without notice. The only warranties for VSI products and services are set forth in the express warranty statements accompanying such products and services. Nothing herein should be construed as constituting an additional warranty. VSI shall not be liable for technical or editorial errors or omissions contained herein.

HPE, HPE Integrity, HPE Alpha, and HPE Proliant are trademarks or registered trademarks of Hewlett Packard Enterprise.

Intel, Itanium and IA-64 are trademarks or registered trademarks of Intel Corporation or its subsidiaries in the United States and other countries.

UNIX is a registered trademark of The Open Group.

Table of Contents

Preface ..... **ix**
1. About VSI ix
2. Intended Audience ix
3. Related Documents ix
4. VSI Encourages Your Comments ix
5. OpenVMS Documentation x
6. Typographical Conventions x

Chapter 1. Fault-Isolation Overview **1**
1.1. Understanding the DECnet-Plus Network Model 1
1.1.1. OSI Network Layer Functions 1
1.1.2. DNA Layer Functions 2
1.1.3. TCP/IP Interoperability 3
1.2. Classifying Problems 3
1.2.1. Reproducible Problems 3
1.2.2. Intermittent Problems 3
1.2.3. Transient Problems 3
1.3. DECnet-Plus Component Relationships 3
1.3.1. Component Relationships (OpenVMS Only) 4
1.3.2. Component Relationships (UNIX Only) 4
1.4. Methods for Isolating Faults 5
1.4.1. Questions to Ask Yourself 5
1.4.2. Fault Isolation in the DECnet-Plus Environment 6
1.4.3. DECnet-Plus Fault-Isolation Methodology 6
1.4.4. Isolating Faults for Reproducible Problems 6
1.4.5. Isolating Faults for Intermittent or Transient Problems 7
1.4.6. Documenting the Fault-Isolation Process and Problem Solution 7

Chapter 2. Preparing for Problem Solving **9**
2.1. DECnet-Plus Symptom Table 9
2.2. Types of Problem-Solving Information 11
2.2.1. Definitions 11
2.2.2. Tools and Commands to Use 11
2.3. Understanding Your Network Topology 12
2.3.1. The decnet_migrate Tool 13
2.3.2. When to Use the decnet_migrate Tool 13
2.3.3. References 13
2.4. Recognizing Node Names and Synonyms 13
2.4.1. Identifying Node Names 14
2.4.2. Finding Node Names and Node Synonyms 14
2.5. Finding the Operating System and Version 14
2.6. Getting DECnet-Plus Circuit Information 15
2.6.1. Routing DECnet-Plus Circuit Information for Problem Solving 15
2.6.2. Finding Routing Circuit Names, Types, States, and Adjacencies 15
2.6.3. Considerations for Broadcast Circuit Adjacencies 15
2.7. Preparing to Find a Network Path 16
2.7.1. Types of Network Information to Find 16
2.7.2. Finding Node Addresses for Node Names 17
2.7.3. Determining Network Entity Titles for DECnet-Plus Nodes 17
2.7.4. Converting Phase IV Addresses to NSAPs 17
2.7.5. Converting NSAP Addresses to Phase IV Format 18

2.8. Tracing DECnet-Plus Network Paths 19
2.8.1. Tracing the Network Path of DECnet-Plus Nodes 19
2.8.2. Tracing a Network Path in a Mixed Environment 20
2.8.3. X.25 DA Circuit Considerations 21
2.8.4. NCL Takes Long Time While Translating Addresses to Names 21

Chapter 3. Testing Network Reachability 23

3.1. Types of Network Reachability Tests 23
3.1.1. Types of Loopback Tests 24
3.1.2. Using Loopback Tests on Phase IV Nodes 24
3.1.3. Types of dts/dtr Tests 24
3.2. OSI Echo Function Overview (UNIX Only) 25
3.2.1. OSI ping Command Syntax 25
3.2.2. Restrictions 25
3.3. Node-Level Loopback Tests Overview 26
3.3.1. When to Use Node-Level Loopback Tests 26
3.3.2. Analyzing Local-to-Local Node Loopback Test Results 26
3.3.3. Log File for Local-to-Local Node Loopback Tests 26
3.3.4. Local-to-Local Node Loopback Figure 26
3.3.5. Analyzing Local-to-Remote Node Loopback Test Results 27
3.3.6. Local-to-Remote Loopback Test Figure 27
3.4. Running Node-Level Loopback Tests 28
3.4.1. Node-Level Loopback Command Parameters 28
3.4.2. Example of Node-Level Loopback Test 28
3.5. Circuit-Level Loopback Test Overview 28
3.5.1. Circuit-Level Loopback Test Figure 29
3.5.2. Identifying Node Addresses for Circuit-Level Loopback Tests 29
3.6. Preparing for Circuit-Level Loopback Tests 29
3.6.1. Example of Circuit-Level Loopback Preparation 30
3.7. Running Circuit-Level Loopback Tests 31
3.7.1. Circuit-Level Loopback Command Parameters 31
3.7.2. Example of Circuit-Level Loopback Test 32
3.8. Running Circuit-Level Loopback Tests with Assistance 32
3.8.1. When to Use Assistance 32
3.8.2. Using Assistance for Fault Isolation 32
3.8.3. Starting a Circuit-Level Loopback Test with Assistance 33
3.8.4. Assistance Parameters 33
3.8.5. Example of Circuit-Level Loopback Test with Full Assistance 34
3.8.6. Example of Circuit-Level Loopback Test with Transmit Assistance 34
3.8.7. Example of Circuit-Level Loopback Test with Receive Assistance 35
3.9. Running LAN Loopback Tests with LLC Messages 35
3.9.1. Starting the LAN Loopback Test 36
3.9.2. LAN Loopback Test Command Parameters 36
3.9.3. Determining Logical Link Control Types on a Remote Node 36
3.10. Running dts/dtr Tests 37
3.10.1. Starting dts/dtr Tests 37
3.10.2. dts Command Syntax 37
3.10.3. General Command Syntax Conventions 38
3.10.4. Examples of Using dts/dtr Test Command Procedures 39
3.11. Running dts/dtr Connect Tests 39
3.11.1. dts/dtr Connect Test Command Syntax 39
3.11.2. Example of dts/dtr Connect Test Command 40
3.12. Running dts/dtr Data Tests 40

3.12.1. dts/dtr Data Test Command Syntax 41
3.12.2. Example of dts/dtr Data Test Command 42
3.13. Running dts/dtr Disconnect Tests 42
3.13.1. dts/dtr Disconnect Test Command Syntax 43
3.13.2. Example of dts/dtr Disconnect Test Command 43
3.14. Running dts/dtr Interrupt Tests 43
3.14.1. Interrupt Test Command Syntax 44
3.14.2. Example of dts/dtr Interrupt Test Command 45

Chapter 4. Solving Problems Using DECnet Over TCP/IP 47

4.1. Local IP Address Displays As 0.0.0.0 47
4.2. Troubleshooting 47

Chapter 5. Solving DECnet-Plus Application Problems 49

5.1. Underlying Components for DECnet/OSI Applications (OpenVMS Only) 50
5.2. Underlying Components for DECnet/OSI Applications (UNIX Only) 51
5.3. Symptoms of DECnet-Plus Application Problems 51
5.3.1. Problem Symptoms for All Systems 51
5.3.2. Problem Symptoms for OpenVMS Systems Only 53
5.3.3. Problem Symptoms for UNIX Systems Only 53
5.4. Isolating DECnet-Plus Application Faults 54
5.4.1. Tools to Use 54
5.4.2. References 55
5.5. Using Event Logging and Log Files 55
5.5.1. Enabling Network Event Logging (OpenVMS Only) 55
5.5.2. Using the FTAM Responder Log File (OpenVMS Only) 56
5.6. Isolating Faults Using Management Tools (OpenVMS Only) 56
5.7. Tracing Overview 57
5.7.1. Trace Files 57
5.7.2. Security Information in Tracing 58
5.8. Tracing Outbound FTAM and Virtual Terminal Connections 58
5.8.1. Generating a Readable Trace File 58
5.8.2. ositrace Command Options (UNIX Only) 58
5.9. Tracing Inbound FTAM and Virtual Terminal Connections 59
5.9.1. Inbound FTAM and VT Tracing (UNIX) 59
5.9.2. Inbound FTAM Tracing (OpenVMS) 60
5.9.3. Inbound VT Tracing (OpenVMS) 60
5.10. Reading Trace Files 61
5.10.1. Interpreting Trace Information 61
5.11. Correcting FTAM Application Problems 62
5.12. Correcting FTAM File-Handling Problems 63
5.12.1. Checking Foreign Filename Formats 63
5.12.2. Correcting File Problems 64
5.13. Correcting General FTAM Connection Problems 64
5.14. Correcting FTAM and Virtual Terminal Connection Problems (UNIX Only) 66
5.14.1. Address in Use 66
5.14.2. Network Is Unreachable 66
5.14.3. Connection Refused 67
5.14.4. Connection Timed Out 67
5.15. Correcting FTAM and Virtual Terminal Responder Problems (OpenVMS Only) 67
5.15.1. Correcting Unexpected Termination Problems 67
5.15.2. Correcting Responder Starting Problems 67
5.16. Correcting FTAM and Virtual Terminal Responder Problems (UNIX Only) 68

5.17. Correcting FTAM Environment Problems (OpenVMS Only) 68
5.18. Correcting Target SAP Connection Problems 69
5.18.1. Correcting FTAM Physical and Data Link Problems 69
5.18.2. Correcting Network Connection Problems 69
5.18.3. Correcting FTAM and VT Transport Problems 71
5.18.4. Correcting FTAM and VT Session Problems (OpenVMS Only) 72
5.18.5. Correcting FTAM and VT Presentation Problems (OpenVMS Only) 72
5.19. Correcting Problems with Applications Using OSAK 73
5.19.1. Correcting Connection Problems 73
5.19.2. Correcting Unexpected Termination Problems 73
5.19.3. Correcting Programming Problems 74

Chapter 6. Solving Session Control Problems 75

6.1. Underlying Components for Session Control (OpenVMS Only) 75
6.2. Underlying Components for Session Control (UNIX Only) 76
6.2.1. References 77
6.3. Symptoms of Session Control Problems 77
6.4. Isolating Session Control Faults 78
6.4.1. Tools and Commands to Use 79
6.4.2. Fault-Isolation Methodology 80
6.5. Correcting Unknown Application Problems 81
6.6. Correcting Application Too Busy Problems 82
6.7. Correcting Access Control Problems 82
6.7.1. Correcting Proxy Access Problems (OpenVMS Only) 83
6.7.2. Correcting Proxy Access Problems (UNIX Only) 83
6.7.3. Correcting Node Name Validation Problems 85
6.8. Correcting Insufficient Resource Problems 85
6.9. Correcting Timed Out Problems 86
6.10. Correcting Node Name Resolution Problems 86
6.10.1. Monitoring Search Path Processing (OpenVMS Only) 87
6.10.2. Tracing Node Name Resolution Problems (UNIX Only) 87
6.10.3. Displaying Search Path Information 87
6.10.4. Identifying Namespace Consistency Problems 88
6.11. Examining the DECnet-Plus Naming Cache (OpenVMS Only) 88
6.11.1. Managing the Naming Cache 88
6.11.2. Dumping the Naming Cache 88

Chapter 7. Solving Transport Problems 91

7.1. Underlying Components (OpenVMS Only) 91
7.2. Underlying Components (UNIX Only) 92
7.3. Symptoms of Transport Problems 93
7.4. Isolating Transport Layer Problems 93
7.4.1. Tools to Use 93
7.4.2. Fault-Isolation Methodology 94
7.5. Correcting Connection Problems 94
7.5.1. Checking Ports 94
7.5.2. Checking NSAP Counters 95
7.6. Correcting OSI Transport Over CLNS Connection Problems 97
7.7. Correcting OSI Transport Over CONS (X.25) Connection Problems 98
7.8. Troubleshooting RFC 1006 99
7.8.1. Common Problems 99

Chapter 8. Solving Network Layer Problems 101

8.1. Underlying Entities (OpenVMS Only) 101

8.2. Underlying Entities (UNIX Only) 102
8.3. Symptoms of Network Layer Problems 103
8.4. Isolating Network Layer Problems 104
8.4.1. Tools to Use 104
8.4.2. Fault-Isolation Methodology 104
8.5. Finding Underlying Entities 105
8.5.1. Finding the Underlying Entities for HDLC Circuits 105
8.5.2. Finding the HDLC Circuits for a Physical Device 105
8.5.3. Finding the Underlying Entities for DDCMP Circuits (OpenVMS Only) 106
8.5.4. Finding the DDCMP Circuits for a Physical Device (OpenVMS Only) 106
8.5.5. Finding the Underlying Entities for CSMA-CD Circuits 107
8.5.6. Finding the CSMA-CD Circuit for a Physical Device 107
8.5.7. Finding the Underlying Entities for FDDI Circuits 107
8.5.8. Finding the FDDI Circuit for a Physical Device 108
8.5.9. Finding the Underlying Entities for Token Ring Circuits (UNIX Only) 108
8.5.10. Finding the Token Ring Circuit for a Physical Device (UNIX Only) 108
8.6. Correcting Configuration Problems 109
8.6.1. Correcting DDCMP (OpenVMS Only) and HDLC Data Link Configuration Problems 109
8.6.2. Correcting CSMA-CD Data Link Configuration Problems 110
8.7. Correcting Connectivity Problems 110

Appendix A. Using the OSAKtrace Utility 113

Appendix B. DECnet-Plus Application Tracing Examples 115

B.1. DECnet-Plus Application Trace Example 115
B.1.1. Association Establishment — Initiator 115
B.1.2. Association Establishment — Responder 119
B.1.3. Passing User Data — Responder 124

Preface

VSI DECnet-Plus for OpenVMS Problem Solving Guide describes how to use DECnet-Plus tools to isolate and correct simple DECnet-Plus problems in the OpenVMS and UNIX environments.

1. About VSI

VMS Software, Inc. (VSI) is an independent software company licensed by Hewlett Packard Enterprise to develop and support the OpenVMS operating system.

2. Intended Audience

VSI DECnet-Plus for OpenVMS Problem Solving Guide is for network managers and system managers who work in a DECnet-Plus environment.

Assumed knowledge

Readers of this book are expected to have a basic understanding of DECnet and OSI networking concepts. It is assumed that readers have experience with DECnet-Plus network management tools such as the Network Control Language (NCL), and DECnet Phase IV tools, such as the Network Control Program (NCP).

3. Related Documents

- DECnet Phase IV management documentation
- Phase IV network troubleshooting documentation
- DECnet-Plus network management documentation
- DECnet-Plus NCL reference documentation
- OSI Applications Kernel (OSAK) documentation
- DECdns or other name service documentation
- DECdts documentation
- The Common Trace Facility Use manual
- X.25 problem-solving documentation
- FTAM and Virtual Terminal documentation

4. VSI Encourages Your Comments

You may send comments or suggestions regarding this manual or any VSI document by sending electronic mail to the following Internet address: `<docinfo@vmssoftware.com>`. Users who have VSI OpenVMS support contracts through VSI can contact `<support@vmssoftware.com>` for help with this product.

5. OpenVMS Documentation

The full VSI OpenVMS documentation set can be found on the VMS Software Documentation webpage at https://docs.vmssoftware.com.

6. Typographical Conventions

VMScluster systems are now referred to as OpenVMS Cluster systems. Unless otherwise specified, references to OpenVMS Cluster systems or clusters in this document are synonymous with VMScluster systems.

The contents of the display examples for some utility commands described in this manual may differ slightly from the actual output provided by these commands on your system. However, when the behavior of a command differs significantly between OpenVMS Alpha and Integrity servers, that behavior is described in text and rendered, as appropriate, in separate examples.

In this manual, every use of DECwindows and DECwindows Motif refers to DECwindows Motif for OpenVMS software.

The following conventions are also used in this manual:

Convention	Meaning
Ctrl/*x*	A sequence such as **Ctrl/***x* indicates that you must hold down the key labeled Ctrl while you press another key or a pointing device button.
PF1 *x*	A sequence such as PF1 *x* indicates that you must first press and release the key labeled PF1 and then press and release another key or a pointing device button.
Return	In examples, a key name enclosed in a box indicates that you press a key on the keyboard. (In text, a key name is not enclosed in a box.)
…	A horizontal ellipsis in examples indicates one of the following possibilities: • Additional optional arguments in a statement have been omitted. • The preceding item or items can be repeated one or more times. • Additional parameters, values, or other information can be entered.
. . .	A vertical ellipsis indicates the omission of items from a code example or command format; the items are omitted because they are not important to the topic being discussed.
( )	In command format descriptions, parentheses indicate that you must enclose the options in parentheses if you choose more than one.
[ ]	In command format descriptions, brackets indicate optional choices. You can choose one or more items or no items. Do not type the brackets on the command line. However, you must include the brackets in the syntax for OpenVMS directory specifications and for a substring specification in an assignment statement.
[|]	In command format descriptions, vertical bars separate choices within brackets or braces. Within brackets, the choices are options; within braces, at least one choice is required. Do not type the vertical bars on the command line.

Convention	Meaning
{ }	In command format descriptions, braces indicate required choices; you must choose at least one of the items listed. Do not type the braces on the command line.
bold text	This typeface represents the introduction of a new term. It also represents the name of an argument, an attribute, or a reason.
italic text	Italic text indicates important information, complete titles of manuals, or variables. Variables include information that varies in system output (Internal error *number*), in command lines (/PRODUCER= *name*), and in command parameters in text (where *dd* represents the predefined code for the device type).
UPPERCASE TEXT	Uppercase text indicates a command, the name of a routine, the name of a file, or the abbreviation for a system privilege.
`Monospace type`	Monospace type indicates code examples and interactive screen displays. In the C programming language, monospace type in text identifies the following elements: keywords, the names of independently compiled external functions and files, syntax summaries, and references to variables or identifiers introduced in an example.
-	A hyphen at the end of a command format description, command line, or code line indicates that the command or statement continues on the following line.
numbers	All numbers in text are assumed to be decimal unless otherwise noted. Nondecimal radixes—binary, octal, or hexadecimal—are explicitly indicated.

Other conventions are:

- All numbers are decimal unless otherwise noted.
- All Ethernet addresses are hexadecimal.

Chapter 1. Fault-Isolation Overview

A necessary part of any type of problem solving is fault isolation. **Fault isolation** is the process used to determine the source of a problem. Quick and efficient fault isolation is key to resolving network problems.

Topics in This Chapter

The topics in this chapter are:

- Understanding the DECnet-Plus Network Model (*Section 1.1, "Understanding the DECnet-Plus Network Model"*)
- Classifying Problems (*Section 1.2, "Classifying Problems"*)
- DECnet-Plus Component Relationships (*Section 1.3, " DECnet-Plus Component Relationships"*)
- Methods for Isolating Faults (*Section 1.4, "Methods for Isolating Faults"*)

1.1. Understanding the DECnet-Plus Network Model

When working in the DECnet-Plus environment, it is useful to understand the network model that the DECnet-Plus software uses. *Figure 1.1, "DECnet-Plus Network Model"* illustrates the network architecture on which DECnet-Plus is based.

Figure 1.1. DECnet-Plus Network Model

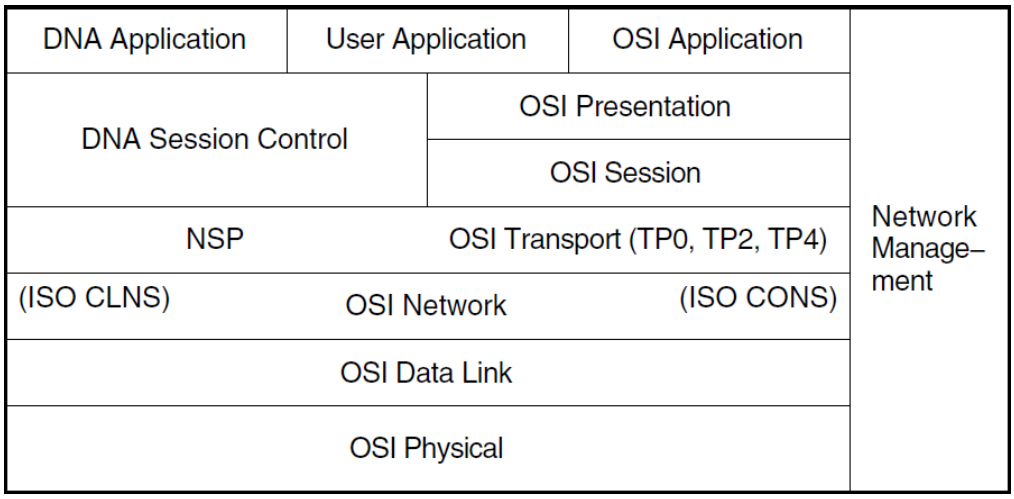

1.1.1. OSI Network Layer Functions

Table 1.1, "OSI Network Layers" briefly describes the functions of the OSI network layers.

Table 1.1. OSI Network Layers

OSI Layer	Name	Function
7	Application	Contains the application services and supporting protocols that use the lower layers. Allows distributed processing and access.
6	Presentation	Coordinates data and data format conversion to meet the needs of individual application processes.
5	Session	Organizes and structures the interaction between pairs of communicating application processes
4	Transport	Transfers data between end systems and has error recovery and flow control. Supported protocol classes are: ● Class 0 (TP0) – Simple protocol class for highly reliable network services ● Class 2 (TP2) – Same as Class 0 with multiplexing feature ● Class 4 (TP4) – Provides error detection and recovery for highly unreliable network services
3	Network	Permits communications between network entities in open systems, whether they are adjacent systems on the same subnetwork or are connected by a path that crosses multiple subnetworks and intermediate systems. DECnet-Plus supports Connection-Oriented Network Service (CONS) and Connectionless-mode Network Service (CLNS), as well as communications between Phase IV and DECnet-Plus systems.
2	Data Link	Specifies the technique for moving data along network links between defined points on the network, and tells how to detect and correct errors in the Physical layer.
1	Physical	Connects systems to the physical communications media.

1.1.2. DNA Layer Functions

Table 1.2, "DNA Network Layers" briefly describes the functions of DNA network layers.

Table 1.2. DNA Network Layers

DNA Layer	Name	Function
7	DNA Application	Includes user-written programs and user-level services. It is used by operators and system programmers to plan, control, and maintain the operation of DECnet-Plus networks.
6 and 5	DNA Session Control	Allows communication between programs, regardless of either program's location through the use of DNA naming services. It also provides access control and authentication functions, and acts as a bridge between applications and the transport services.

DNA Layer	Name	Function
4	Network Services Protocol (NSP)	Allows interoperability with Phase IV systems.
3, 2, and 1	Same as described in *Section 1.1.1, "OSI Network Layer Functions"*	

1.1.3. TCP/IP Interoperability

The DECnet/OSI for UNIX applications, FTAM and Virtual Terminal, support RFC 1006 and can use TCP/IP transport services. This manual does not include problem-solving information for TCP/IP networks. Refer to your TCP/IP documentation for this information.

1.2. Classifying Problems

Before you try to correct problems, try to classify the type of problem that exists. The following sections describe typical problem classifications.

1.2.1. Reproducible Problems

A **reproducible problem** consistently produces the same error message or symptom when reproduced under the same conditions.

Some reproducible problems produce different error messages or symptoms that can ultimately have the same underlying cause. These types of reproducible problems are considered inconsistent. **Inconsistent problems** generally involve several protocols or several layers of an architecture. The different error messages result from the ways different applications encounter the problem in the protocols and the architectural layers.

1.2.2. Intermittent Problems

An **intermittent problem** appears occasionally and displays the same error message or symptoms in the same circumstances. You can occasionally reproduce intermittent errors. Intermittent errors can occur when threshold values for various parameters are reached. Usually, during normal use, these thresholds are not reached; however, the thresholds can be reached during peak use and errors can result.

1.2.3. Transient Problems

Transient problems occur only occasionally, and can rarely be reproduced. Because you cannot reliably reproduce transient problems, they are by far the most difficult errors to isolate and fix.

As with intermittent problems, transient problems can result when threshold values for various parameters are reached. Because transient errors tend to occur at peak usage times, historical performance data is helpful in determining the cause of the problem.

1.3. DECnet-Plus Component Relationships

Figure 1.2, "Component Relationships (OpenVMS)" and *Figure 1.3, "Component Relationships (UNIX)"* show the relationships between the individual components in the DECnet-Plus environment on OpenVMS and UNIX systems. Use this information as a guide when you need to identify problems in a specific DECnet-Plus layer.

For information and problem solving procedures relating to X.400, DECdns, and DECdts software, refer to the appropriate software documentation.

1.3.1. Component Relationships (OpenVMS Only)

Figure 1.2, "Component Relationships (OpenVMS)" shows the OpenVMS component relationships.

Figure 1.2. Component Relationships (OpenVMS)

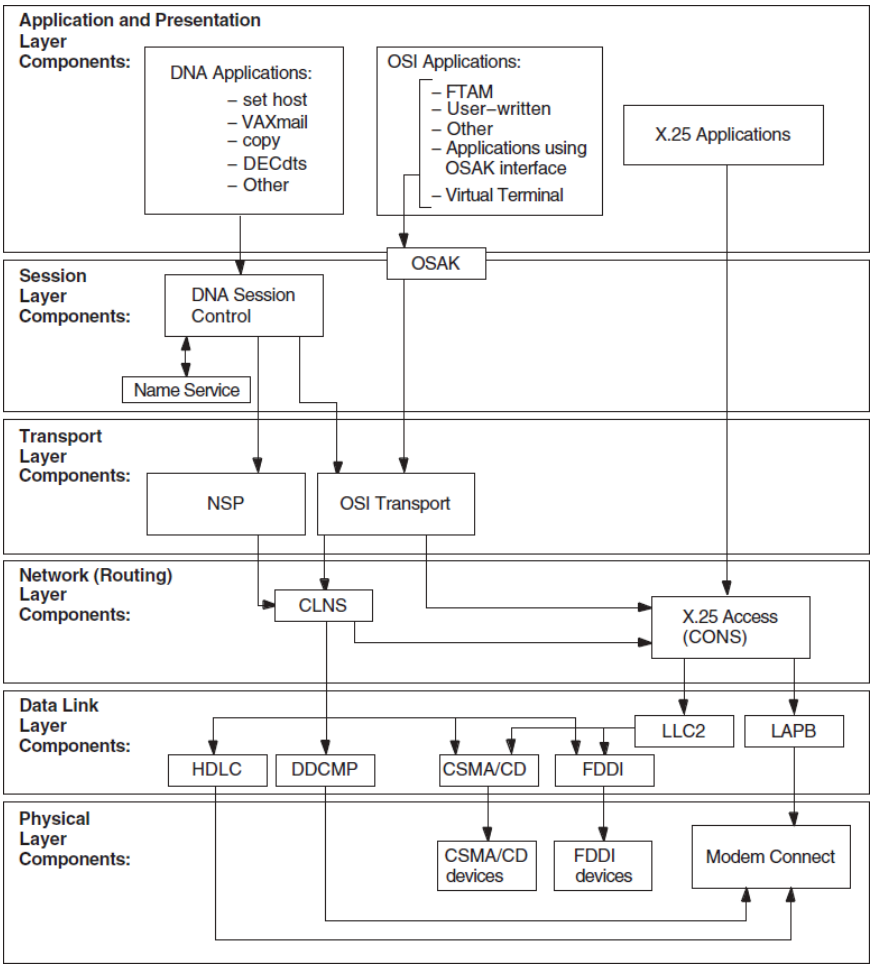

1.3.2. Component Relationships (UNIX Only)

DECnet-Plus applications that use the X/Open Transport Interface (XTI) can use the TCP transport services in addition to the OSI transport services. This manual does not contain information about TCP/IP networks; refer to your TCP/IP documentation.

Figure 1.3, "Component Relationships (UNIX)" shows the component relationships for UNIX.

Figure 1.3. Component Relationships (UNIX)

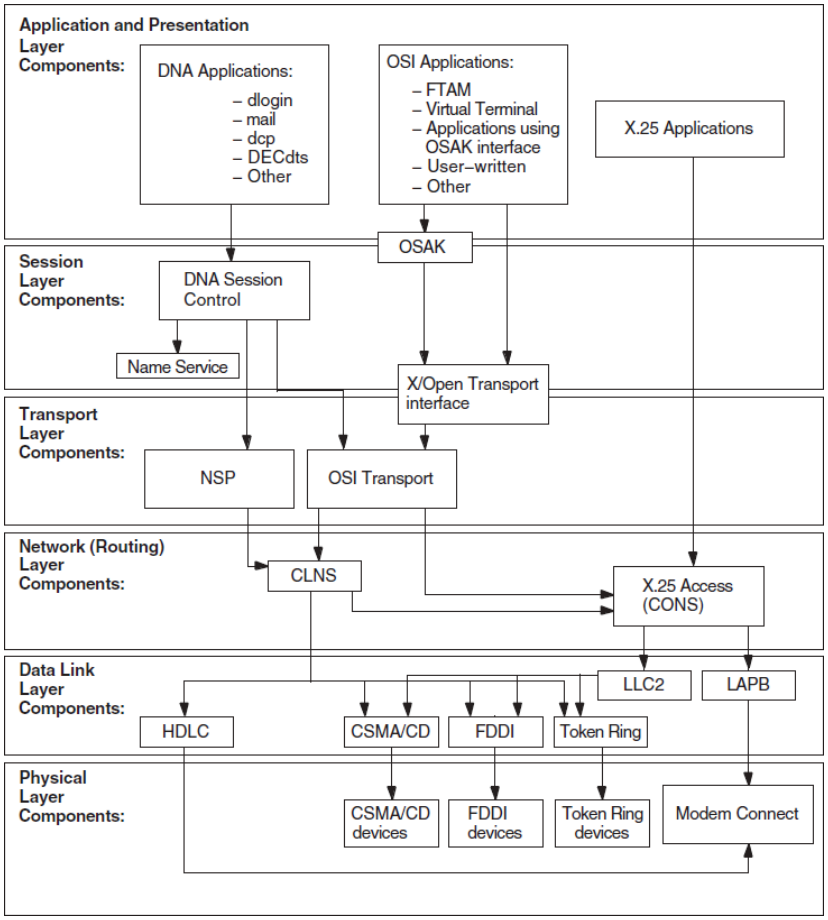

1.4. Methods for Isolating Faults

When attempting to isolate faults, consider the following:

- The conditions that existed when an error appeared
- The relationships between DECnet-Plus components
- The type of problem you have: reproducible or intermittent
- The changes you made prior to the error appearing

1.4.1. Questions to Ask Yourself

Answers to the following questions can help identify a starting point for problem solving:

- Which components, systems, or applications are working correctly?
- When did you first notice the problem?
- Did you see any error messages?
- What were you doing when the problem occurred?

- Can you re-create the problem?
- Did you recently add or change hardware or software?
- How often has the problem occurred since you first noticed it?

1.4.2. Fault Isolation in the DECnet-Plus Environment

Problem symptoms do not always indicate which DECnet-Plus component is the cause of the problem. To clarify where the problem exists, use another operation or application that relies on the same underlying services or components as the operation that failed.

The figures in Sections *Section 1.3.1, "Component Relationships (OpenVMS Only)"* and *Section 1.3.2, "Component Relationships (UNIX Only)"* show the relationship between the components in the DECnet-Plus environment.

1.4.3. DECnet-Plus Fault-Isolation Methodology

Isolating and solving network problems often requires a variety of approaches. You can use the general methodology illustrated in *Figure 1.4, "Fault-Isolation Methodology (General)"* as a starting point for fault isolation.

Figure 1.4. Fault-Isolation Methodology (General)

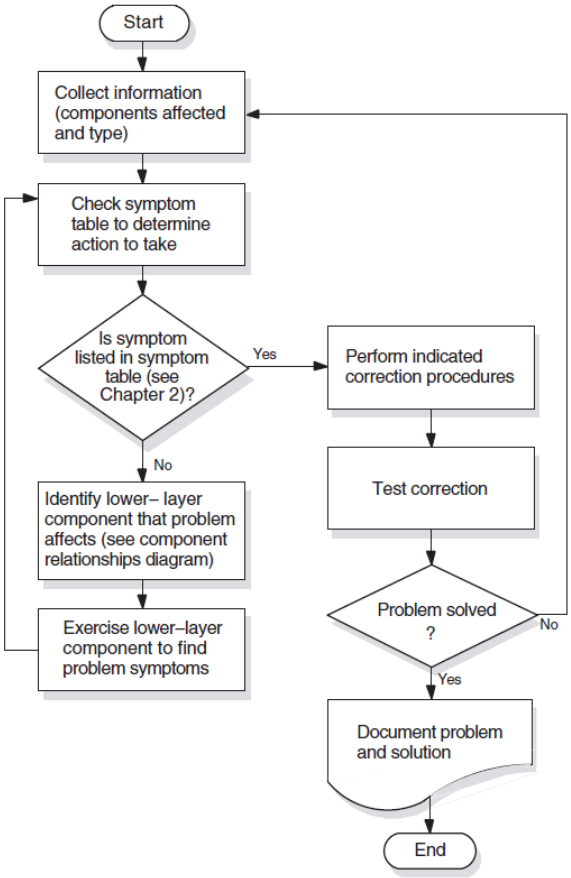

1.4.4. Isolating Faults for Reproducible Problems

You can use the following procedure when reproducible problems occur:

1. Find network activities that are similar, where one activity succeeds and the other fails. For example; if the OpenVMS command `set host` fails, try a similar operation to the same remote node. Then try the `set host` operation from the same local node to a different remote node.

2. Determine the most recent time when the operation succeeded. Then determine what has changed in the network since then.

1.4.5. Isolating Faults for Intermittent or Transient Problems

You can use the following procedure when intermittent or transient problems occur:

1. Collect as much information as possible regarding the state of the network when the problem appears. This information includes any type of trace information that application trace utilities provide.

2. Examine historical and trace data to determine if any patterns exist; for example, if the FTAM application fails only when attempting a directory operation on a specific vendor's system.

3. Try to reproduce the problem by re-creating the state of the system when the problem first appeared.

4. If you can reproduce the problem, follow the process described in *Section 1.4.4, "Isolating Faults for Reproducible Problems "*.

1.4.6. Documenting the Fault-Isolation Process and Problem Solution

Documenting the steps you used to isolate a problem makes reporting the situation to VSI representatives easier if you are unable to solve the problem yourself.

Always record the following:

- The conditions under which problems occurred
- The hardware and software version numbers used in your network
- The processes you used to identify problems
- The information you collected about the problems
- The procedures you used to solve problems

Chapter 2. Preparing for Problem Solving

This chapter describes the types of information that can help you isolate and correct DECnet-Plus problems.

Topics in This Chapter

The topics in this chapter are:

- DECnet-Plus Symptom Table (*Section 2.1, " DECnet-Plus Symptom Table"*)
- Types of Problem-Solving Information (*Section 2.2, "Types of Problem-Solving Information"*)
- Understanding Your Network Topology (*Section 2.3, "Understanding Your Network Topology"*)
- Recognizing Node Names and Synonyms (*Section 2.4, "Recognizing Node Names and Synonyms"*)
- Finding the Operating System and Version (*Section 2.5, "Finding the Operating System and Version"*)
- Getting DECnet-Plus Circuit Information (*Section 2.6, "Getting DECnet-Plus Circuit Information"*)
- Preparing to Find a Network Path (*Section 2.7, "Preparing to Find a Network Path"*)
- Tracing DECnet-Plus Network Paths (*Section 2.8, "Tracing DECnet-Plus Network Paths"*)

2.1. DECnet-Plus Symptom Table

Table 2.1, "DECnet-Plus Symptom Table" describes symptoms of common DECnet-Plus problems. Use this table when preparing to start your fault isolation process.

Table 2.1. DECnet-Plus Symptom Table

Symptom:	Possible Cause:	Refer To:
Access control rejected	Session Control application entities, proxy access, or node name validation	*Chapter 6, "Solving Session Control Problems"*
Application failed but no errors were found in the upper layers	Transport or network error	*Chapter 7, "Solving Transport Problems"* *Chapter 8, "Solving Network Layer Problems"*
Application too busy	Remote application is receiving too many connection requests before it or Session Control can process them	*Chapter 6, "Solving Session Control Problems"*
DECnet-Plus application connection attempts fail	Application or network problem	*Chapter 5, "Solving DECnet-Plus Application Problems"* (OpenVMS only) or *Chapter*

Symptom:	Possible Cause:	Refer To:
		8, "Solving Network Layer Problems"
Entities were not available when tracing a path between a routing circuit and the physical device	Routing circuit or data link is not enabled or created	*Chapter 8, "Solving Network Layer Problems"*
FTAM or Virtual Terminal responder fails (OpenVMS only)	FTAM or Virtual Terminal application	*Chapter 5, "Solving DECnet-Plus Application Problems"*
FTAM file does not look correct (OpenVMS only)	FTAM application	*Chapter 5, "Solving DECnet-Plus Application Problems"*
Object is unknown at remote node	Namespace problem	*Chapter 6, "Solving Session Control Problems"*
Remote node is shut or shutting down	Remote DECnet process exited or remote node failed	*Chapter 6, "Solving Session Control Problems"*
Remote node is unreachable	Incompatible tower information exists, or a network problem	*Chapter 6, "Solving Session Control Problems"* *Chapter 8, "Solving Network Layer Problems"*
Session Control has insufficient resources	All available Session Control ports are in use	*Chapter 6, "Solving Session Control Problems"*
System configuration is correct but the routing circuit does not work	Routing connectivity	*Chapter 8, "Solving Network Layer Problems"*
Timed out	Session Control, transport or network problem	*Chapter 6, "Solving Session Control Problems"* *Chapter 7, "Solving Transport Problems"* *Chapter 8, "Solving Network Layer Problems"*
Unable to communicate with any DECdns server	DECdns problem	DECdns manuals
Unknown application at remote node	DECnet-Plus application missing or defined incorrectly Session Control application entities or proxy access	*Chapter 5, "Solving DECnet-Plus Application Problems"* (OpenVMS only) or *Chapter 6, "Solving Session Control Problems"*
User-written application problem affects the OSAK software (OpenVMS only)	Programming error	*Chapter 5, "Solving DECnet-Plus Application Problems"*
User-written application fails	OSAK (OpenVMS only) or XTI programming error	*Chapter 5, "Solving DECnet-Plus Application Problems"* (OpenVMS only) or XTI programming manuals

Symptom:	Possible Cause:	Refer To:
User-written DECnet-Plus application terminates unexpectedly	Remote application or OSI Transport	*Chapter 5, "Solving DECnet-Plus Application Problems"* (OpenVMS only) or *Chapter 7, "Solving Transport Problems"*
Wrong information displayed or wrong account accessed	Proxy access problem or use of invalid username and password	*Chapter 6, "Solving Session Control Problems"*

2.2. Types of Problem-Solving Information

The information that you often need when you try to isolate and solve DECnet-Plus problems includes:

- The type of problem (see *Section 1.2, "Classifying Problems"*)
- Network topology, including:
  - Node names and types (end node, level 1 router, level 2 router)
  - Operating system
  - Networking software in use
  - Types of routing circuits in use
  - Routing circuit adjacencies
  - The network path from one node to another
- Naming information (node names and Phase IV node synonyms)

2.2.1. Definitions

A **network topology** shows the physical and logical locations of components in a network. A current map of the physical and logical locations of all of the devices on your network is important in helping you find specific devices quickly.

A **Phase IV node synonym** is a Phase–IV–style node name that enables applications that do not support the length of a DECnet-Plus full name to continue to use a six–character Phase–IV–style node name.

A **routing circuit** is a logical path between adjacent nodes. DECnet Phase IV circuit names are based on the hardware type used by the lines connecting nodes. A DECnet-Plus circuit name can be in any format.

A **network path** is the path data takes from one end system to another end system in the same or a different area.

2.2.2. Tools and Commands to Use

Table 2.2, "Problem Solving Tools and Commands" shows the tools and commands you can use to find information about your network.

Table 2.2. Problem Solving Tools and Commands

To Find:	Use:	And Refer To:
Network protocol information	Common Trace Facility	Common Trace Facility Use manual
	DECnet-Plus application traces (OpenVMS only)	*Chapter 5, "Solving DECnet-Plus Application Problems"*
	Network Control Language	NCL reference documentation
Network topology	NCP for Phase IV nodes	DECnet Phase IV documentation
	NCL for DECnet-Plus nodes	DECnet-Plus NCL reference documentation
	`decnet_migrate` for networks that use WAN router products	DECnet-Plus network management documentation
Routing circuit adjacencies	NCP for Phase IV nodes	DECnet Phase IV documentation
	NCL for DECnet-Plus nodes	DECnet-Plus network management documentation
Node reachability	The following for quick reachability tests: ● The UNIX command `dlogin` *`address`* or the OpenVMS command `set host` *`address`* ● The UNIX command `dls` *`address`* or the OpenVMS command `directory` *`address`* ● OSI Ping for UNIX systems only	*Chapter 3, "Testing Network Reachability"*
	Loopback and `dts/dtr` tests for more detailed testing	*Chapter 3, "Testing Network Reachability"*
DECnet software version	For DECnet-Plus nodes, the NCL command `show node` *`node-id`* `implementation`	DECnet-Plus NCL reference documentation
	For Phase IV nodes, the NCP command `tell` *`node-id`* `show exec`	DECnet Phase IV management documentation

2.3. Understanding Your Network Topology

There are many ways to collect network topology information. Two methods are:

- Creating reports using the `decnet_migrate` tool

- Tracing potential data paths from one end system to another using the `decnet_migrate` tool

2.3.1. The decnet_migrate Tool

You can use the `decnet_migrate` tool to get the following information for each node in your network:

- Basic information, including:
  - Name
  - Address
  - Type of DECnet software in use (Phase IV or DECnet-Plus)
  - Routing type
  - Node identification string
- Adjacent nodes for each node
- Defined target network applications (or objects) for each node
- Routing circuit IDs and costs for each node
- Maximum routing hops, cost, and network buffer size
- Areas known to level 2 routers in the network

You can also use the `decnet_migrate show path` function to trace network routes between one node and another.

2.3.2. When to Use the decnet_migrate Tool

Use this tool when you need a detailed map of parts or all of the complete network topology. If you have routers that use the Simple Network Management Protocol (SNMP), the `decnet_migrate` tool cannot collect information about them. Use the tools those routers provide to collect network topology information.

Collecting this information with the `decnet_migrate` tool can take a significant amount of time depending on the options you select.

2.3.3. References

The DECnet-Plus network management documentation explains how to use the `decnet_migrate` commands `collect, report`, and `show path` in detail. Sections *Section 2.8.1, "Tracing the Network Path of DECnet-Plus Nodes"* and *Section 2.8.2, "Tracing a Network Path in a Mixed Environment "* describe which NCL and NCP commands to use to trace network paths in the DECnet-Plus environment.

2.4. Recognizing Node Names and Synonyms

It is useful to have node name information when trying to isolate faults. Node names reflect either a Phase IV or DECnet-Plus style.

2.4.1. Identifying Node Names

Table 2.3, "Phase IV and DECnet-Plus Node Name Differences" shows the differences between Phase IV and DECnet-Plus node names.

Table 2.3. Phase IV and DECnet-Plus Node Name Differences

Characteristics	Example
Phase IV node names are: ● Up to six alphanumeric characters ● Stored in a local network database	MYNODE

DECnet-Plus node names are:
● Typically, longer than six alphanumeric characters
● Divided into the following elements:
  • Namespace nickname for DECdns or Local for the Local namespace
  • Directory names
  • Node name
● Stored in the DECdns distributed namespace or the Local namespace.
	ABC:.eng.node1

2.4.2. Finding Node Names and Node Synonyms

Use the following commands to find a system's node synonym or to find a DECnet-Plus full node name from a system's node synonym:

To Find A:	Use This decnet_register Command:
Phase IV synonym	`decnet_register> show node node-id`
Full node name	`decnet_register> show node node-id`

2.5. Finding the Operating System and Version

Do the following to find your system's current operating system and version:

1. Log in to the system and look at the system prompt.

If the Prompt Is:	Then the Operating System Is:
`Username:`	OpenVMS
`login:`	UNIX

2. If the operating system version does not appear when you log in, enter one of the following commands:

If the Operating System Is:	Enter:
OpenVMS	`$ show system`
UNIX	`strings /vmunix|grep '(Rev')`

2.6. Getting DECnet-Plus Circuit Information

To find basic routing circuit information, use Network Control Program (NCP) commands for Phase IV nodes and Network Control Language (NCL) commands for DECnet-Plus nodes. Refer to your NCP documentation for information about NCP commands.

2.6.1. Routing DECnet-Plus Circuit Information for Problem Solving

The following information can be useful when you need to solve routing circuit problems:

- Routing circuit name
- Routing circuit type
- Routing circuit state
- Routing circuit adjacencies

2.6.2. Finding Routing Circuit Names, Types, States, and Adjacencies

Do the following to find a circuit name, type, and state:

To Find Routing Circuit:	Enter This NCL Command:
Name	`ncl> show node node-id routing circuit * name`
Type	`ncl> show node node-id routing circuit * type`
State	`ncl> show node node-id routing circuit * state`

Routing circuit adjacencies result from nodes exchanging identification information. Finding circuit adjacencies is a quick way to:

- Confirm that a routing circuit is working
- Check the identity of the adjacent node

Routing circuit adjacencies exist for wide area network (WAN) circuits, and local area network (LAN) circuits. Use the following NCL command to find routing circuit adjacencies:

```
ncl> show node node-id routing circuit circuit-id -
_ncl> adjacency * all status
```

2.6.3. Considerations for Broadcast Circuit Adjacencies

When you look at broadcast circuit adjacencies, the output can be extensive because many adjacencies can exist at one time. It can be more useful to request certain types of information rather than *all* information.

For example, you could use the following NCL command:

```
ncl> show node node-id1 routing circuit circuit-1 adjacency -
_ncl> node-id2 type
```

2.7. Preparing to Find a Network Path

Tracing a path from one end system to another can isolate network reachability problems and also can provide network topology information. The information in this section describes the type of information you need before you trace a network path.

2.7.1. Types of Network Information to Find

Use the Network Control Program (NCP) to get network path information from Phase IV nodes. Use the Network Control Language (NCL) to get network path information from DECnet-Plus nodes. *Table 2.4, "Types of Network Information to Trace"* lists the information you need to trace a network path and how to identify this information.

Table 2.4. Types of Network Information to Trace

Information	Description	
Node Addresses	Nodes have addresses that DECnet uses when sending data through a network. Phase IV nodes only have one node address; DECnet-Plus nodes can have up to six NSAP addresses; three that NSP use and three that OSI Transport use. Phase IV node addresses and NSAP addresses are different. However, you can translate a Phase IV node address into an NSAP address.	
	Phase IV Node Addresses:	**NSAP Addresses:**
	Are called node numbers.	Are called network service access points (NSAPs).
	Are 2 bytes in length.	Can be up to 20 bytes (40 hexadecimal digits) in length.
	Contain an area number (1 – 63) and a node number (1 – 1023).	DECnet-Plus Phase IV–compatible addresses contain: 1. Phase IV prefix (the IDP–Initial Domain Part). 2. Local area number - this is equivalent to a Phase IV area number. 3. ID; a 6-byte field that is formatted like a 48-bit IEEE address and uniquely identifies a node within its area. This is equivalent to a Phase IV node number.

Information	Description
	4. A 1-byte NSAP selector that identifies the user of the Network layer, either NSP or OSI transport. The hexadecimal number %x21 indicates OSI transport; the hexadecimal number %x20 indicates NSP.
Network entity titles (NETs)	Used to identify a node when it is not necessary to identify the transport software in use. A NET has the same format as an NSAP with a selector byte of %x00.
System type	A system can be an end system, a level 1 router, or a level 2 router.

2.7.2. Finding Node Addresses for Node Names

A Phase IV node has one address; a DECnet-Plus node can have multiple NSAP addresses. You can determine a node's address as follows:

For This Node Type:	Enter:
Phase IV	The NCP command: `tell node-spec show exec`
DECnet-Plus	The NCL command: `show node node-id routing port * nsap address`

If you cannot get the remote node's address in this manner, you need to log in to that system directly.

2.7.3. Determining Network Entity Titles for DECnet-Plus Nodes

A network entity title (NET) has the same format as a system's network service access point (NSAP), except the last two digits are set to 00. For example, if the NSAP is 49::00-0D:AA-00-04-00-7F-34:20, the NET is 49::00-0D:AA-00-04–00-7F-34:00.

2.7.4. Converting Phase IV Addresses to NSAPs

If you know a system's Phase IV address, you can do the following to convert it to an NSAP (see your DECnet introduction documentation for details about NSAPs):

Step	Action
1	Ensure that the NSAP local area is in the Phase IV area in hexadecimal notation. For example, the Phase IV area 1 becomes the NSAP local area 00-01, and the Phase IV area 63 becomes the NSAP local area 00-3F.
2	Convert the Phase IV node ID to the NSAP node ID: a. Use the formula `(area * 1024) + ID` to convert the Phase IV area and ID to a single decimal value.

Step	Action
	b. Convert the value from step (a) to a four-digit hexadecimal number, and swap the first and last pairs of the hexadecimal digits. c. Use the number from step (b) as the last four digits of the NSAP's node ID field, and add the prefix `aa-00-04-00`.

Example of Phase IV Address Conversion

In this example, the network IDP (initial domain part) is 41:45436192:, the DSP(domain-specific part) is `local-area:node-id:20`, the Phase IV address is 43.258, and the node uses the NSP transport. You create the NSAP as follows:

```
IDP and selector   -> 41:45436192:local-area:node-id:20
43 decimal         -> 2B     hexadecimal (local area)
(43 * 1024) + 258) -> 44290  decimal
44290 decimal      -> AD02   hexadecimal
AD02  swapped      -> 02AD   hexadecimal (node ID)

Resulting NSAP     -> 41:45436192:00-2b:aa-00-04-00-02-ad:20
```

2.7.5. Converting NSAP Addresses to Phase IV Format

If you know a system's NSAP, you can do the following to convert it to a Phase IV address:

Step	Action
1	Check that the local area is less than or equal to 63 decimal or 3F hexadecimal and the node ID field begins with `aa-00-04-00`. If both of these conditions do not exist, then the NSAP does not contain a Phase IV address and cannot be converted. If it does, go to the next step.
2	Extract the last four digits of the node ID field.
3	Swap the last two pairs of digits, and convert the value to decimal.
4	Calculate the Phase IV area and ID values: a. `area = value/1024` b. `id = value - (area * 1024)` If the calculated area value is not equal to the area value obtained from the NSAP's local area field, the NSAP does not contain a valid Phase IV address.

Example of NSAP Conversion

In this example, the NSAP is 37:81076541234:00-19:aa-00-04-00-62-64:21. You calculate the Phase IV address as follows:

```
19 hexadecimal (from local area)  -> 25 decimal
62-64 (from node-id)              -> 6462 hexadecimal
6462 hexadecimal                  -> 25698 decimal
25698/1024                        -> area of 25
25698 - (25 * 1024)               -> node ID of 98
```

```
Resulting Phase IV address        -> 25.98
```

2.8. Tracing DECnet-Plus Network Paths

You can trace a network path for a pure DECnet-Plus environment and for a mixed environment that has DECnet-Plus and Phase IV nodes.

2.8.1. Tracing the Network Path of DECnet-Plus Nodes

You can trace the path from one node to another with the following command:

```
$ run decnet_migrate
DECNET_MIGRATE>sho path from
NAMES:.NETA.NODEA to NAMES:.NETB.NODEB
```

Do the steps in the following table to trace a network path from one DECnet-Plus end system to another:

Step	Action
1	Find the destination NSAPs.
2	Analyze the NSAPs to find the area addresses of the destination system.

3	Find a DECnet-Plus router that the source node uses. Do the following:
	
	a. Find the source node's routing circuits. Use the following NCL command:
	
	`ncl> show routing circuit * all`
	
	b. Select a circuit whose state is ON, and use the following NCL command to display the NET of the associated router:
	
	`ncl> show routing circuit circuit-id -`
	`_ncl> adjacency * all`
	
	The LAN address in the display may show the actual node name of the router. You can use this or the NET in this procedure. A LAN address is not displayed in all situations. For example, if tracing a path from an X.25 DA circuit, no LAN address is displayed.
	
	A DECnet-Plus router may not exist. See the procedure in *Section 2.8.2, "Tracing a Network Path in a Mixed Environment "* if the next node in the path is a Phase IV router. If the next node in the path is a third-party router, see that system's documentation.

4	If the router you find in the previous step is in the same area as your destination node, go to the next step. If the router is in a different area than the destination node, do the following:
	
	a. Search the router's destination area database for the destination area. Use the following NCL command (on OpenVMS systems, the *router-id* is the router's node name or the NSAP without punctuation and prefixed with `net$` – for example, `net$490013AA00040089FF20`; on UNIX systems, the `router-id` can be the router's NET or the node name):
	
	`ncl> show node router-id routing -`
	`_ncl> destination area destination-area all`

Step	Action

	Note
	
	You can also use the `decnet_register` utility to display information about node names.
	
	b. Look at the routing circuit adjacency that the previous command displays. Use the following NCL command (On UNIX systems, the *router-id* can be the router's NET or the node name):
	
	`ncl> show node router-id routing -`
	`_ncl> circuit circuit-id adjacency -`
	`_ncl> adjacency-id all`
	
	This command displays the NET for the next router in the path. If the next router is not in the same area as the destination node, repeat steps a and b until you locate a router in the same area.

5	When you find a router located in the same area as the destination node, do the following:
	
	a. Search the router's destination node database to find the circuit adjacency that the router uses to reach the next node in the path. Use the following NCL command:
	
	`ncl> show node router-id routing destination -`
	`_ncl> node node-id all`
	
	b. Show the routing adjacency to determine the next node in the path. Use the following NCL command:
	
	`ncl> show node router-id routing circuit -`
	`_ncl> circuit-id adjacency adjacency-id all`
	
	c. If the adjacency leads to another router, repeat steps (a) and (b) until you reach the adjacency that connects to the destination node.

2.8.2. Tracing a Network Path in a Mixed Environment

Your network can contain DECnet-Plus and Phase IV nodes. If you start to trace a path from a DECnet-Plus node and the next router in the path is a Phase IV router, do the following:

Step	Action
1	Exit NCL and invoke NCP (or invoke NCP at the NCL prompt).
2	Use NCP to get the Phase IV node address of your destination node and the router.

3	Find the next node in the path. Use the following NCP commands (the *router-id* can be the node name or the Phase IV address):
	
	`ncp> tell phase_iv-node-id show node -`
	`_ncp> destination-node-address`

Step	Action
4	If the next node in the path is not the destination node, repeat the commands in step 3, using the next node that the `show node` command displays as the `next-node-id`, until you reach the destination node.
5	If NCP returns an error message, the next node in the path could be a DECnet-Plus node. Do the following: a. Exit NCP and invoke NCL. b. Repeat steps 4 or 5 in *Section 2.8.1, "Tracing the Network Path of DECnet-Plus Nodes"*.

2.8.3. X.25 DA Circuit Considerations

If you are tracing a network path from an X.25 DA circuit, you cannot use NSAP or NET information to find the next node in the path. Use the following procedure to help you trace a path from an X.25 DA circuit:

Step	Action
1	Find the reachable address subentity that has a prefix that best matches your required destination NSAP.
2	Select a DTE from the DTE Addresses attribute and determine the node address (NSAP or Phase IV synonym) associated with the remote DTE address.
3	If you cannot determine the node address, try to log in to the remote node using X.29 (PAD) and continue tracing the network path from the remote node.

2.8.4. NCL Takes Long Time While Translating Addresses to Names

When NCL displays a node address in response to a SET or SHOW command, it uses the services of DECdns to translate the address into a node name and displays the name along with the address.

If there is a problem with accessing a remote name server that prevents the translation from completing, NCL may take a long time translating addresses to names. If this happens, enter a Ctrl/Y to terminate NCL, then make the following definition prior to executing NCL:

```
$ DEFINE NCL$ENVIRONMENT NOBACKTRANS
```

This causes NCL to bypass the address-to-name translation. To use this option on a systemwide basis, add this logical definition (with the /SYSTEM qualifier) to SYS$MANAGER:NET$LOGICALS.COM.

Chapter 3. Testing Network Reachability

This chapter describes the network reachability tests you can use in the DECnet-Plus environment.

Topics In This Chapter

The topics in this chapter are:

- Types of Network Reachability Tests (*Section 3.1, "Types of Network Reachability Tests"*)
- OSI Echo Function Overview (UNIX Only) (*Section 3.2, "OSI Echo Function Overview (UNIX Only)"*)
- Node-Level Loopback Tests Overview (*Section 3.3, "Node-Level Loopback Tests Overview"*)
- Running Node-Level Loopback Tests (*Section 3.4, "Running Node-Level Loopback Tests"*)
- Circuit-Level Loopback Test Overview (*Section 3.5, "Circuit-Level Loopback Test Overview"*)
- Preparing for Circuit-Level Loopback Tests (*Section 3.6, "Preparing for Circuit-Level Loopback Tests"*)
- Running Circuit-Level Loopback Tests (*Section 3.7, "Running Circuit-Level Loopback Tests"*)
- Running Circuit-Level Loopback Tests with Assistance (*Section 3.8, "Running Circuit-Level Loopback Tests with Assistance"*)
- Running LAN Loopback Tests with LLC Messages (*Section 3.9, "Running LAN Loopback Tests with LLC Messages"*)
- Running dts/dtr Tests (*Section 3.10, "Running dts/dtr Tests"*)
- Running dts/dtr Connect Tests (*Section 3.11, "Running dts/dtr Connect Tests"*)
- Running dts/dtr Data Tests (*Section 3.12, "Running dts/dtr Data Tests"*)
- Running dts/dtr Disconnect Tests (*Section 3.13, "Running dts/dtr Disconnect Tests"*)
- Running dts/dtr Interrupt Tests (*Section 3.14, "Running dts/dtr Interrupt Tests"*)

3.1. Types of Network Reachability Tests

You can use the following network reachability tests:

Test	Description
Quick reachability	Provides a fast indication that a remote node is reachable using applications such as `dlogin` or `set host` with the node address instead of the node name. If you cannot connect to a node using its

Test	Description
	node name but can connect to it using the address, the cause could be a naming service problem. For UNIX systems, you can also use OSI Echo function (OSI ping).
Loopback	Loopback tests (node level, circuit level, and LAN with LLC test messages) let you thoroughly use network software and hardware by sending data through various network components and returning that data to its source for comparison.
DECnet Test Sender and Receiver (`dts/dtr`)	Throughput tests that allow you to load test the ability of different systems to exchange data. The `dts/dtr` tests are also useful if you want to check Transport layer connections. Parameters are available to regulate such variables as message length, test duration, and type of data used.
X.25 and OSI Transport IVP (OpenVMS systems only)	These tests check if the X.25 or OSI transport software is working correctly. Your installation documentation describes them.

3.1.1. Types of Loopback Tests

You can use the loopback tests described in this section for DECnet-Plus systems. Refer to your DECnet Phase IV documentation if you need details about similar tests for Phase IV systems.

Test Type	Description
Node level	Checks the logical link capabilities of a node by exchanging test data between DECnet tasks in two different nodes or in the same node. You use NCL to run this test, which enables you to connect to a loopback mirror application. The types of node-level tests are: ● **Local-to-Local loopback tests**, which evaluate the local node's DECnet software using an internal logical link path; no physical device is used. ● **Local-to-Remote loopback tests**, which verify network operation between the local node and a remote node.
Circuit level	Checks a DECnet circuit by looping test data between a `mop` task and the communication hardware on one or two systems.

3.1.2. Using Loopback Tests on Phase IV Nodes

To perform loopback tests when logged in to a Phase IV node, use NCP commands (see your DECnet Phase IV documentation for details). To perform loopback tests when logged in to a DECnet-Plus node, use NCL commands, even if you are testing a remote Phase IV node.

3.1.3. Types of dts/dtr Tests

The `dts/dtr` program provides the following basic tests:

Test	Description
Connect test	Verifies that the receiving node (`dtr` node) can process connection requests and return acceptance and rejection messages with or without optional user data.
Data test	Provides a full range of tests from very simple data sink operations through data integrity checking.
Disconnect test	Verifies that the receiving node (`dtr` node) can send out disconnect messages with or without optional user data.
Interrupt test	Provides a full range of test capabilities from very simple data sink operations through data integrity checking.

3.2. OSI Echo Function Overview (UNIX Only)

DECnet/OSI for UNIX implements an OSI Echo function (OSI ping). This function enables an *ISO 8473* network-entity to generate a special type of PDU, the Echo Request PDU, also known as OSI ping, which is sent to the requested destination in order to elicit an Echo Response PDU from that destination.

This implementation supports both RFC 1139 and Amendment X to ISO 8473. It is important to realize that not all OSI systems support the OSI Echo function. Consequently, an attempt to ping such a system will not succeed even though that system is functioning normally.

3.2.1. OSI ping Command Syntax

The OSI ping command syntax is:

```
/usr/sbin/oping [options] host [datasize] [npackets]
```

The `host` is a DECnet/OSI node name, node synonym or NSAP (preceded by %x). For example: `abc:.xyz.node1 node1 %x49000caa000400192000`

The following table describes the optional arguments for this command:

Option	Description	
Options	`-l`	More verbose statistics are printed, including packet sequence and round-trip time estimate.
	`-s`	Uses the *short term implementation* of RFC 1139 (see *Section 3.2.2, "Restrictions"*). Same statistics as for the `-l` option are printed.
`datasize`	If no data size is specified, the default value of 64 bytes is used for the data portion.	
`npackets`	If no npackets are specified and the -l option is used, `oping` will send approximately 1 echo request per second until stopped by the user. If npackets is specified, exactly npackets echo requests will be sent.	

3.2.2. Restrictions

Several different implementations of OSI Echo function exist in the industry. Before Amendment X to ISO8473 existed, various vendors implemented RFC 1139 (an Echo function for ISO 8473).

RFC 1139 offers two possible implementation mechanisms. The first, called "The Short Term Implementation Mechanism" uses special NSAP selectors in the data PDUs conveying the echo messages. The second, called "The Long Term Implementation Mechanism," uses special PDU types for Echo request and Echo Response PDUs.

Amendment X to ISO 8473 implements the "Long Term Mechanism"which OSI ping uses by default. To interoperate with the "Short Term Implementation Mechanism", use the `-s` option if an attempt to ping a system using the default mechanism fails.

3.3. Node-Level Loopback Tests Overview

Use the node-level loopback tests first; if further testing is desired, use the circuit-level loopback tests.

3.3.1. When to Use Node-Level Loopback Tests

Use the local-to-local loopback test to verify operation of the local Network, Application, Session Control, Transport layers, and part of the Routing layer.

Use the local-to-remote loopback test to verify operation of all levels of network software on the local and remote nodes you are testing.

3.3.2. Analyzing Local-to-Local Node Loopback Test Results

If a looped message returns with an error, the test stops and NCL displays a message specifying the reason for the failure. If the loopback test completes successfully, there is no output.

A failure of this test indicates a problem with the local node software, such as the network being turned off or access control to the mirror not being properly established. If the local-to-local loopback test fails, check the log file for additional information on the cause of the failure.

If the local-to-local loopback test succeeds, perform a local-to-remote loopback test. If the local-to-remote test fails, try the circuit-level tests to determine if the hardware is at fault.

3.3.3. Log File for Local-to-Local Node Loopback Tests

The OpenVMS log file for local-to-local loopback test failures is `net$server.log`. You find this file in the `mirro$server` account if you set up a mirror account when you installed the DECnet-Plus software. If the mirror account does not exist, the location of the `net$server.log` file depends on the type of account from which the test is initiated.

For example, if the account from which the test initiates has an account on the target system, then the `net$server.log` file is located in the account on the target system. If this account does not exist on the target system, the connection is not completed. Additionally, if the initiating system uses a proxy account to connect to the target system, then the `net$server.log` file is found in the proxy account.

The UNIX log file for local-to-local loopback test failures is `/usr/adm/syslog.dated/dd-mmm-hh.mm/daemon.log`.

3.3.4. Local-to-Local Node Loopback Figure

Figure 3.1, "Local-to-Local Loopback Test" illustrates a local-to-local loopback test.

Figure 3.1. Local-to-Local Loopback Test

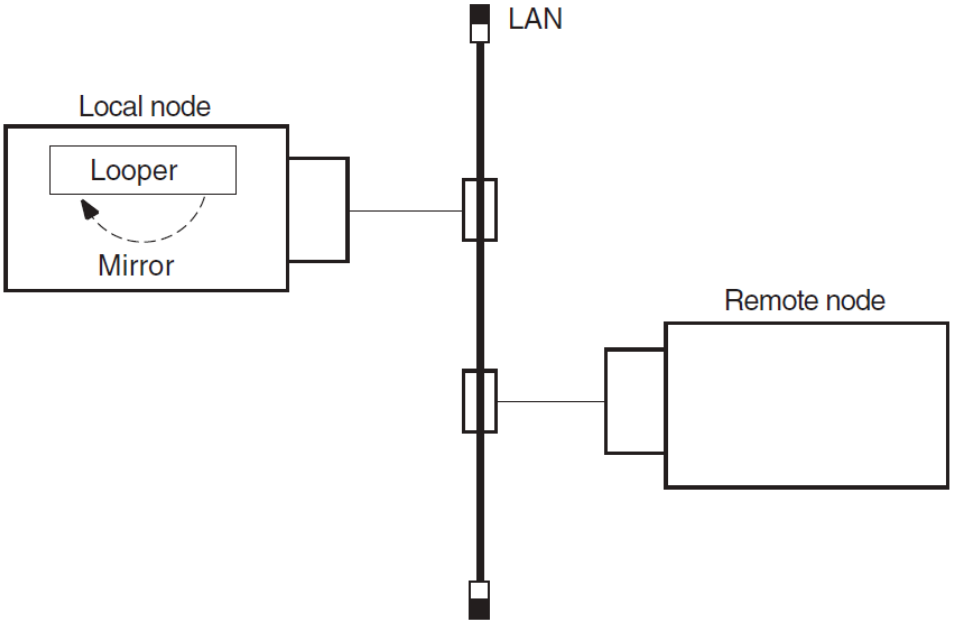

3.3.5. Analyzing Local-to-Remote Node Loopback Test Results

If the previous local-to-local tests were successful and this test fails, a problem exists with either the remote node or the network. Try the test again with a different remote node. If the second test succeeds, a problem with the first remote node that you used probably caused the failure. If the test fails, a network problem probably caused the failure.

3.3.6. Local-to-Remote Loopback Test Figure

Figure 3.2, "Local-to-Remote Loopback Test" illustrates a local-to-remote loopback test.

Figure 3.2. Local-to-Remote Loopback Test

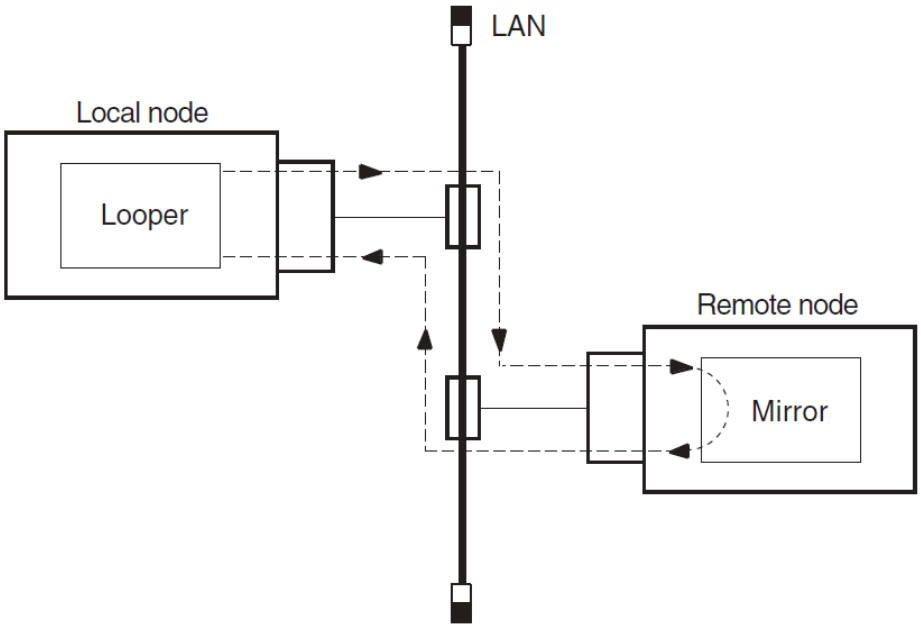

3.4. Running Node-Level Loopback Tests

When you start this test, identify the node to which you want to loop test messages with the node's full name. This node must be reachable over circuits that are in the `On` state.

Use the following NCL command to start a node-level loopback test:

```
ncl> loop [node node-id] loopback application [parameter,] -
_ncl> name node-id
```

The `node node-id` parameter identifies the node from which you start the test. The default value of this parameter is 0. The `name node-id` parameter identifies the node to which you want to loop.

3.4.1. Node-Level Loopback Command Parameters

You can specify any of the following optional parameters:

Parameter	Description
`format`	Specifies the type of binary information used to perform the test. Specify this value as a pair of hexadecimal digits such as format=FF. The hexadecimal value 55, a combination of ones and zeros, is the default.
`count`	Specifies the number of data blocks to be sent during the test. Specify a number from 1 (default) through 65,535.
`length`	Specifies the length in bytes of each block to be looped. This value must be a decimal integer from 1 through *n*. The value of *n* must be less than the smaller buffer size of the two tasks involved in the test. The default is 40 bytes.

3.4.2. Example of Node-Level Loopback Test

In the following test, a network manager attempts to loop 10 messages to node BOSTON. The result is that the message is not looped because node BOSTON is unreachable.

```
ncl> loop loopback application count 10, name boston
node 0 Loopback Application at 1991-04-22-13:00:27.725-04:00I0.212

FAILED IN DIRECTIVE: Loop DUE TO: Error specific to this entity’s class

REASON: Connection Failed
Description: The Connection to the remote mirror failed
ncl>
```

3.5. Circuit-Level Loopback Test Overview

These tests use a low-level data link interface rather than the logical links used by the node-level tests. They use DECnet software to loop data through the circuit-to-circuit service software in the adjacent node and back to the local node. You can specify optional parameters for assistance in testing a remote node (see *Section 3.8.4, "Assistance Parameters"*).

On non-LAN circuits, you can loop test data through a passive loopback connector or through an active remote system. On LAN circuits, the remote system ultimately returns the test data.

3.5.1. Circuit-Level Loopback Test Figure

Figure 3.3, "Circuit-Level Loopback Test" illustrates a circuit-level loopback test.

Figure 3.3. Circuit-Level Loopback Test

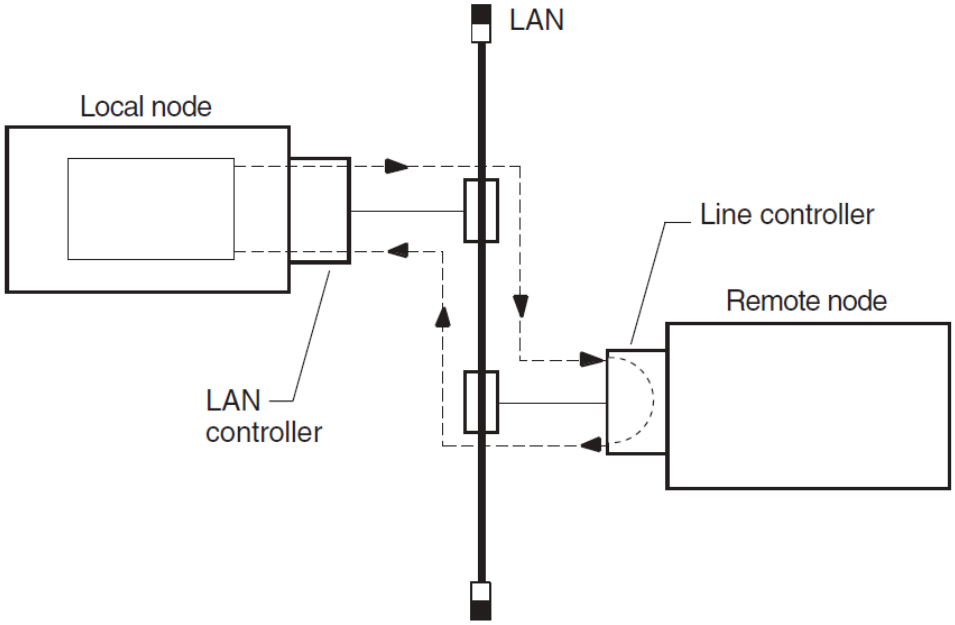

3.5.2. Identifying Node Addresses for Circuit-Level Loopback Tests

Unique Ethernet addresses identify nodes on Ethernet circuits. If the node is running DECnet Phase IV, or is a DECnet-Plus node that has a Phase IV node synonym, this physical address is the one that DECnet created using the DECnet node address. If the node is not running DECnet, the physical address is the default hardware address of the node.

3.6. Preparing for Circuit-Level Loopback Tests

Do the following before you run a circuit-level software loopback test:

Step	Action
1	Use the NCL command `show mop state` to check that the `mop` entity is in the `On` state.
2	Use the NCL command `show mop circuit * name, function` to check that the circuit to be tested has `loop requester` function enabled.
3	If the `mop` entity or the circuit is not in the appropriate state, use the NCL commands `create mop circuit` *`circuit-id`* `type` *`type-id`* to start them. For example, you could use the following commands:
	`ncl>create mop circuit csmacd-0 type csma-cd` This creates the MOP circuit, csmacd-0.

Step	Action

	`ncl>set mop circuit csmacd-0 link name -`
	`_ncl>csma-cd station csmacd-0`
	This customizes the entity definition for the circuit `csmacd-0`.

	You can also start them with an NCL command script, such as `/var/share/dna/scripts` on a UNIX system.
	On an OpenVMS system, you can use: `@sys$system:startup network mop`
4	Determine the physical device associated with a `mop circuit` as follows: a. Use the NCL command `show mop circuit` *`circuit-id`* `all characteristics` to show the circuit characteristics. b. Use the NCL command `show` *`data link`* `all status` to show the status of the corresponding data link.

3.6.1. Example of Circuit-Level Loopback Preparation

In this example, the output from the NCL commands shows:

1. The mop entity is in the `On` state.
2. Circuit-1, the circuit to be tested, has the loopback function enabled.
3. `mop circuit circuit-1` is associated with device `xna0`.

```
❶ ncl> show mop state

Node 0 MOP
AT 1994-1-04-1-13:27:12/325-05:00I0.176

Status
   State    = On

❷ ncl> show mop circuit * name, function

Node 0 MOP Circuit *
AT 1994-04-1-13:27:30.095-05:00I0.178

Identifiers

   Name    = circuit-1

Status

   Functions    = {
                          Loop Requester,
                          Load Requester,
                          Load Server,
                          Dump Server
                          }
```

```
❸ ncl> show mop circuit circuit-1 all char

Node 0 MOP Circuit circuit-1
AT 1992-04-01-13:38:27.747-05:00I0.198

Characteristics

    Type = CSMA-CD
    Link Name = CSMA-CD Station csmacd-1
    Retransmit Timer = 4
    Known Clients Only = False

ncl> show csma-cd station csmacd-1 all status

Node 0 CSMA-CD Station csmacd-1
AT 1992-04-01-13:39:27.557-05:00I0.204

Status

    UID = 535AD8E0-F037-11C9-B60F-08002B16A872
    Communication Port = xna0
    Hardware Address        = 08-00-2b-16-a8-72
    State = On
    MAC Address = aa-00-04-00-50-30
    Receive Mode = Normal
```

3.7. Running Circuit-Level Loopback Tests

Use the NCL command `loop mop circuit` *`circuit-id`* [*`parameter`*] or `loop mop client` *`client-id`* to start a circuit-level loopback test.

Typically, you specify a client entity unless you need to test communication with a system that has no corresponding client entity. The circuit-level loopback command parameters are the same for both commands.

If you specify a LAN circuit, specify the address for the target communications hardware. For example, you enter:

```
ncl> loop mop circuit circuit-1 address -
_ncl> AA-00-04-00-79-34
```

If you specify a synchronous or asynchronous circuit (for example, HDLC or DDCMP) you do not need to specify the address.

3.7.1. Circuit-Level Loopback Command Parameters

You can specify any of the following parameters:

Parameter	Description
`format`	Specifies the type of binary information used for the test. This is specified as a pair of hexadecimal digits such as format=FF. The hexadecimal value 55, a combination of ones and zeros, is the default.
`count`	Specifies the number of data blocks to be sent during the test. It is a number from 1 (default) through 65,535.

Parameter	Description	
`length`	Specifies the length (in bytes) of each block to be looped. This value must be a decimal integer in the range of 1 through *n*, where *n* is determined by the circuit and buffer sizes available on the local and remote systems. On the Ethernet, the allowable length is from 1 byte to the maximum length of the data pattern, which varies according to the level of assistance. The default is 40 bytes.	
	Level of Assistance	**Maximum Length**
	No assistance	1486 bytes
	Transmit or receive assistance	1478 bytes
	Full assistance	1470 bytes
`assistant address`	Specifies the address of the system to be used as an assistant node. An assistant node is a remote system that helps you interrogate another remote node.	
`assistant system`	Specifies the `node-id` of the system to be used as an assistant node. Use this only for LANs.	
`assistance type`	Specifies the level of assistance you want to use (see *Section 3.8.4, "Assistance Parameters".*)	

3.7.2. Example of Circuit-Level Loopback Test

In this test, the software attempts to send 10 messages through the circuit called circuit-1.

```
ncl> loop mop circuit circuit-1 address aa-00-03-00-ff-08, count 10
```

3.8. Running Circuit-Level Loopback Tests with Assistance

DECnet supports the use of an assistant node to aid you in interrogating a remote node. You can use the assistance feature for LAN circuits only.

3.8.1. When to Use Assistance

You might choose one form of assistance over another for the following reasons:

- If the target node to which you want to transmit is not receiving messages from your node, you can request assistance in transmitting messages to it.
- If your node is able to transmit messages to the target node but unable to receive messages from it, you can send a message directly to the target node and request the assistant's aid in receiving a message back.
- If you encounter difficulties in both sending and receiving messages, you can request the assistant's aid for both operations.

3.8.2. Using Assistance for Fault Isolation

Running the circuit-level loopback tests with assistance in the following order can help you isolate connection problems:

1. Run a direct loopback test (with no assistance). If this test succeeds, the target system is reachable.
2. If the direct loopback test fails, use full assistance. If this test succeeds, the target system is reachable. The local system or the LAN could be the cause of your problem.
3. If the loopback test with full assistance fails, run loopback tests with transmit or receive assistance to determine if the problem occurs during transmittal or receipt of data.

3.8.3. Starting a Circuit-Level Loopback Test with Assistance

Use one of the following NCL commands to start a circuit-level loopback test with assistance:

```
ncl> loop mop circuit circuit-id address address -
_ncl> assistance type [assistance type]
```

If you already defined a MOP client with circuit and address attributes, omit the `circuit-id` and `address` parameters and just identify the client as follows:

```
ncl> loop mop client client-name
```

If no MOP client is defined:

```
ncl> loop mop circuit circuit-id address address,
-_ncl> assistance type [assistance type]
```

3.8.4. Assistance Parameters

When you specify either the `assistant system` or `assistant address` parameter without an assistance type, you receive `full` assistance by default. The following table describes the assistance type values:

Assistance Type Value	Description
`assistance type none`	No assistance is used.
`assistance type full`	This assistance type aids in transmitting loop messages to and receiving messages from a remote node (default value).
`assistance type receive`	This assistance type aids in receiving loop messages from a remote node.
`assistance type transmit`	This assistance type aids in transmitting loop messages to a remote node.

Example of Assistant Address Command

In this example, you request the node described by the LAN physical address AA-00-04-00-15-04 to assist you in testing the node described by the LAN physical address AA-00-04-00-18-04. Because `assistant address` is specified without the `assistant type` parameter, `full` assistance is given.

```
ncl> loop mop circuit circuit-1 address aa-00-04-00-18-04, -
_ncl> assistant address aa-00-04-00-15-04
```

Example of Assistant System Command

In this example, you request node THRUSH to assist in testing node LOON by transmitting the loopback data to node LOON. THRUSH must already be defined in the MOP client database, with a value for its circuit and address.

```
ncl> loop mop client loon, assistant system -
_ncl> thrush, assistant type transmit
```

3.8.5. Example of Circuit-Level Loopback Test with Full Assistance

Figure 3.4, "Circuit-Level Loopback Test with Full Assistance" illustrates a loopback test between the circuit for Node1 and Node3, with Node2 providing assistance. The NCL command is:

```
ncl> loop mop client Node3, assistant system Node2
```

Figure 3.4. Circuit-Level Loopback Test with Full Assistance

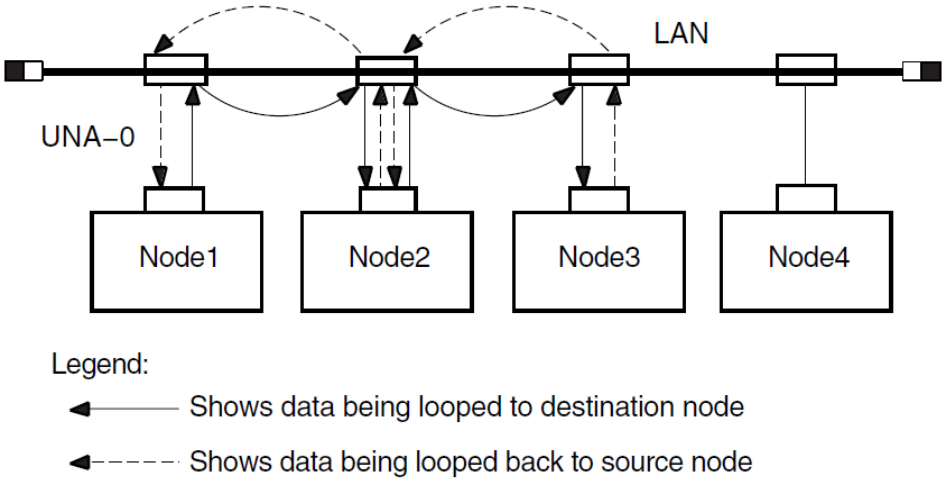

3.8.6. Example of Circuit-Level Loopback Test with Transmit Assistance

Figure 3.5, "Circuit-Level Loopback Test with Transmit Assistance" illustrates a loopback test between Node1 and Node3, with Node2 providing transmit assistance. The NCL command is:

```
ncl> loop mop client Node3, assistant system Node2, -
_ncl> assistance type transmit
```

Figure 3.5. Circuit-Level Loopback Test with Transmit Assistance

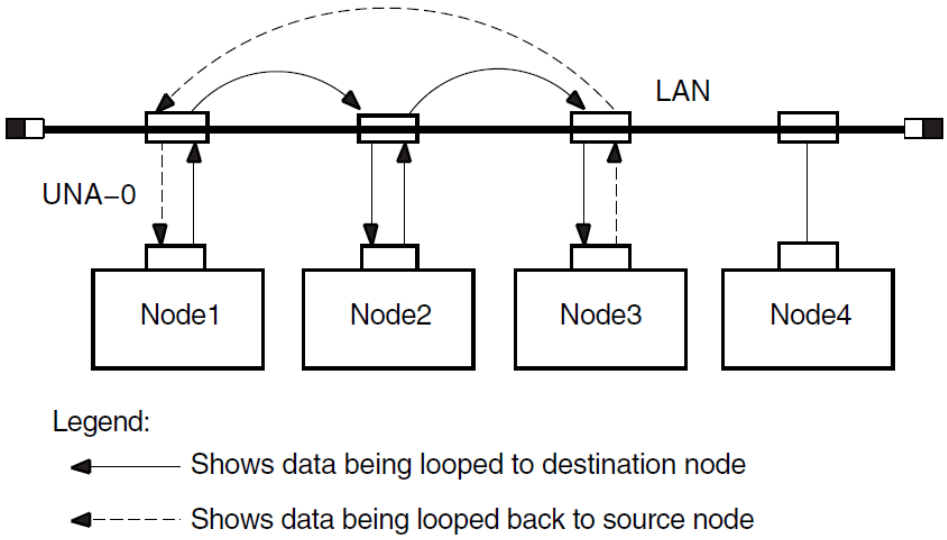

3.8.7. Example of Circuit-Level Loopback Test with Receive Assistance

Figure 3.6, "Circuit-Level Loopback Test with Receive Assistance" illustrates a loopback test between Node1 and Node3, with Node2 providing receive assistance. The NCL command is:

```
ncl> loop mop client Node3, assistant system Node2 -
_ncl> assistance type receive
```

Figure 3.6. Circuit-Level Loopback Test with Receive Assistance

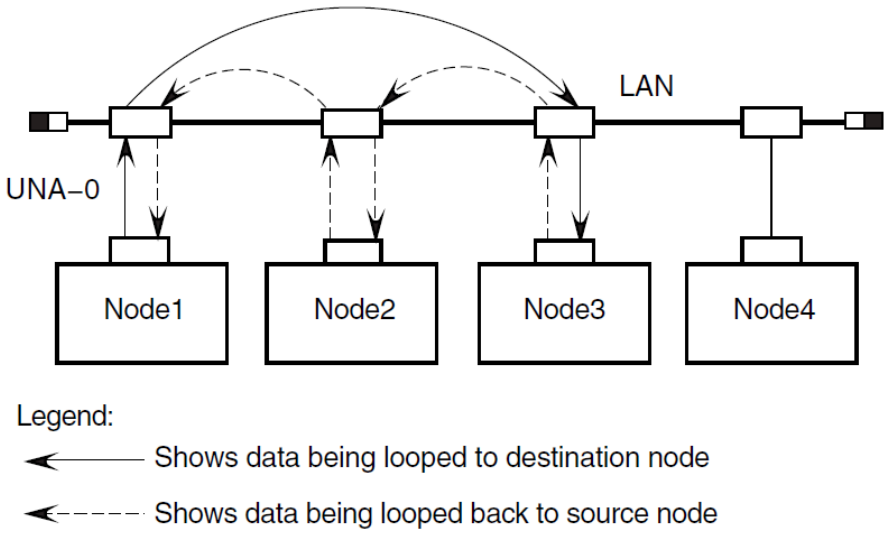

3.9. Running LAN Loopback Tests with LLC Messages

This test allows you to perform LAN loopback tests that use IEEE 802.3 logical link control (LLC) test messages.

3.9.1. Starting the LAN Loopback Test

Do the following to start a LAN loopback test:

Step	Action
1	Make sure the circuit you want to test has the Test Requester function enabled.

2	Enter one of the following NCL commands:
	
	`ncl> test mop circuit circuit-id address -`
	`_ncl> lan-address [ parameter]`
	`ncl>test mop client client-name [ parameter]`
	
	Typically, you specify a client entity, unless you need to test communication with a system that has no corresponding client entity. The LAN loopback test command parameters are the same for both commands.

3.9.2. LAN Loopback Test Command Parameters

The following table describes the `test` command parameters for the LAN loopback test:

Parameter	Description
`count count`	Specifies the number of messages you want to loop. The default is 1. If the test fails, NCL displays the number of messages that successfully looped.
`length length`	Specifies the length of the data part of each test message. The maximum and minimum permitted values depend on the particular data link that you use. The default is 40.
`format format`	Specifies the value of each byte in the test data message. The hexadecimal value 55, which is a pattern of alternating ones and zeros, is the default.
`sap sap`	Specifies the service access point on the target system to which the test message is sent as 2 hexadecimal digits. The default is 00.

3.9.3. Determining Logical Link Control Types on a Remote Node

You can use the NCL command `query` to determine the logical link control (LLC) types that a remote system supports. The `query` command sends an IEEE 802.2 LLC XID command to a remote system and receives an XID response in return. The circuit must have the Query Requester function enabled before you can use the `query` command.

You can apply the `query` command to a circuit or client entity. Typically, you use a client entity, unless you need to query a system that has no corresponding client entity. You can use the same attributes for either a client or a circuit. For example, you can use either of the following commands:

```
ncl> query mop client client-name SAP sap
```

```
ncl> query mop circuit circuit-id SAP sap
```

In both commands, *sap* is the service access point on the target node, specified as 2 hexadecimal digits, to which the XID message is sent. The default is 00.

3.10. Running dts/dtr Tests

The `dtr` program functions as a slave to `dts` and exists as defined object 63 at the remote node. The `dts` program initiates each test by issuing a connect request to `dtr`. The `dts` program passes parameter information pertinent to the type of test requested to `dtr` in the optional data of the connection request. You can use the `dts` user interface to customize the test to be performed by issuing commands with options.

3.10.1. Starting dts/dtr Tests

Do the following to start `dts/dtr` tests:

Step	Action	
1	Be sure that all of the DECnet protocol layers (Session Control, Transport, Routing, and Data Link) are in the `on` state.	
2	Enter one of the following commands:	
	OpenVMS Systems:	**UNIX Systems:**
	`$ run sys$system:dtsend`	`% dts`

	The system responds with a message and a prompt similar to the following:
	`DTS initiated on Mon Feb 26 13:06:22 1994`
	`(DECnet/OSI for DIGITAL UNIX)`
	`DTS>`	

3	Enter `dts` commands at the command prompt.	
4	To end testing, type `exit` in response to the `dts` prompt. The `dts` program displays a termination message on your screen when it exits, and the system prompt reappears.	

You can also enter `dts` commands with a `dts` command file (see *Section 3.10.4, "Examples of Using dts/dtr Test Command Procedures"*). You can press the up arrow key to recall previously entered commands.

3.10.2. dts Command Syntax

Use the following format to enter `dts` commands:

test [*qualifiers*] [*test-specific-qualifiers*]

The following table describes the command components.

Component	Description	
test	Specifies the type of test, which must be one of the following:	
	`connect`	Connect test
	`data`	Data test

Component	Description	
	`disconnect`	Disconnect test
	`interrupt`	Interrupt test
`qualifiers`	Specifies any number of the following optional qualifiers. These qualifiers remain in effect for all applicable tests until you change them or exit from `dts`. A slash (/) must precede each qualifier.	
	Qualifier	**Description**
	/`nodename = node-id`	The name or address of the DECnet node on which you want `dtr` to run. You must specify it once and then the default will be that node name. If you run `dtr` on a remote node, you must run it on a default nonprivileged account (guest account), because you cannot specify access-control information with this qualifier. The `node-id` can be 0, a Phase IV address or on a `UPROD` system, a DECnet-Plus NSAP address. If any part is different from the dts sender node default, it should be specified.
	/`print` or /`noprint` (default)	Tells `dts` whether to print (log) test results.
	/`statistics` or /`nostatistics` (default)	Tells `dts` whether to print statistics on data and interrupt tests.
	/`display` or /`nodisplay` (default)	Tells `dts` whether to print the data and interrupt messages transmitted to `dtr` during data and interrupt tests.
	/`speed = number`	Specifies the test line speed in bits per second (default=0); `dts` uses this data for reporting statistics.
	/`transport = transport name`	*For UNIX systems only.* Specifies the transport protocol to use, where the transport name is either `dna_nsp` or `dna_tp4`.
`test-specific-qualifiers`	Specifies any number of test-specific qualifiers, as defined in the sections that describe each test. Test-specific qualifiers apply to the current test only.	

3.10.3. General Command Syntax Conventions

The `dts` command syntax uses the following conventions:

- All test names and qualifiers can be abbreviated to the first three or more unique characters.
- The default values for a qualifier remain in effect until a different value is specified. The specified value then becomes the new default for all following tests until that value is changed.

3.10.4. Examples of Using dts/dtr Test Command Procedures

The following OpenVMS example shows how to instruct `dts` to process the commands contained in the file `dts.com` and to redirect the output to the file `dts.log`.

```
$ run sys$system:dtsend/output=dts.log
```

The following UNIX example shows how to instruct `dts` to process the commands contained in the file `dtsscript` and to redirect the output to logging file `dts.log`.

```
% dts <dtsscript >dts.log
```

3.11. Running dts/dtr Connect Tests

You can perform the following connect tests:

Test	Description
Connect reject without user data	The `dts` node sends a connection request to the `dtr` node. The `dtr` node returns a rejection message that does not contain optional data.
Connect accept without user data	The `dts` node sends a connection request to the `dtr` node. The `dtr` node returns an acceptance message that does not contain optional data.
Connect reject with standard user data	The `dts` node sends a connection request to the `dtr` node. The `dtr` node returns a rejection message that contains a standard string of optional data. If the transport is NSP, it is 16 bytes and, if the transport is TP4, it is 32 bytes.
Connect accept with standard user data	The `dts` node sends a connection request to the `dtr` node. The `dtr` node returns an acceptance message that contains a standard string of optional data. If the transport is NSP, it is 16 bytes and, if the transport is TP4, it is 32 bytes.
Connect reject with received user data used as reject user data	The `dts` node sends a connection request that contains optional data to the `dtr` node. The `dtr` node returns a rejection message that contains the same optional data.
Connect accept with received user data used as accept user data.	The `dts` node sends a connection request that contains optional data to the `dtr` node. The `dtr` node returns an acceptance message that contains the same optional data.

3.11.1. dts/dtr Connect Test Command Syntax

Do the following to start a `connect` test:

1. Invoke NCL on the `dtr` node and enter the following command:

```
ncl>set session control application dtr user name= "username"
```

The equal sign (=) in this command is optional.

2. Invoke dts on the `dts` node.
3. Enter the following command:

```
connect [ qualifiers] [test-specific-qualifiers]
```

The following table describes the *`test-specific-qualifiers`*.

Qualifier	Description	
/`type = subtest`	Specifies the type of test, where *`subtest`* can be:	
	`accept`	Connect accept test (default)
	`reject`	Connect reject test
/`return= type` or `noreturn`	Specifies the type of data returned by `dtr`. The *type* can be:	
	`standard`	Standard user data
	`received`	Received user data
	`/noreturn`	No optional user data returned (default)
`/transport=dna_nsp` or `dna_tp4`	*For UNIX systems only*. Defaults to the first available protocol tower.	

3.11.2. Example of dts/dtr Connect Test Command

This command invokes a `connect accept` test (by default) with remote node MONTRL.

```
dts> connect/nodename=montrl/return=received
```

The `dtr` program returns received user data as part of the test.

3.12. Running dts/dtr Data Tests

You can perform the following data tests:

Test	Description
Sink test	The `dtr` program ignores all data received. No sequence or content validation is performed.
Sequence test	Data messages transmitted by `dts` to `dtr` include a 4-byte sequence number. If a message is received out of sequence, `dtr` aborts the logical link and the test.
Pattern test	Data messages transmitted to `dtr` have both a sequence number and a standard data pattern. If neither the sequence number nor the received data matches the expected data, `dtr` aborts the logical link and the test.

Test	Description
Echo test	Data messages received by `dtr` are transmitted back to `dts`, which checks the sequence number and data for the returned messages. If either is incorrect, `dts` aborts the link and the test.

3.12.1. dts/dtr Data Test Command Syntax

Invoke `dts` and use this command to start a `data` test:

`data [qualifiers][test-specific-qualifiers]`

On OpenVMS systems, the value of the `node` qualifier must be a minimum of 4 characters.

The following table describes the *`test-specific-qualifiers`*.

Qualifier	Description	
/`type=` *`subtest`*	Specifies the type of test, where *subtest* can be:	
	`sink`	Sink test (default)
	`sequence`	Sequence test
	`pattern`	Pattern test
	`echo`	Echo test
/`size=` *`number`*	Specifies data message length in bytes. On OpenVMS systems, *`number`* is a value from 5 to 4,095. On UNIX systems, *`number`* is a value from 1 to 2,048 (default=128). The minimum value for `number` on a sequence test is 4 and on a pattern test is 5. A size of 4,095 returns an error message on an echo test.	
/`test-duration`	Specifies duration of the test in one of the following formats:	
	`seconds=` *`number`*	Range: 1 to 60 (1 to 59 on OpenVMS)
	`minutes=` *`number`*	Range: 1 to 60 (1 to 59 on OpenVMS)
	`hours=` *`number`*	Range: 1 to 24
	On OpenVMS systems, the default is `seconds=30`. On UNIX systems, the default is `seconds=15`.	
/`flow=` *`type`* or /`noflow` (default)	Specifies type of flow control, if any, where *`type`* can be:	
	`segment`	Segment flow control
	`message`	Message flow control (default, if `/flow` is specified)
	If `dtr` is running on OpenVMS software, it must use the system default.	

Qualifier	Description
/rqueue= *number* or /squeue= *number*	*For UNIX systems only.* Specifies the number of pending receives for dtr to maintain, where *number* is a value from 1 to 16 (default = 1). If the remote system is a DECnet-Plus node, this parameter is ignored.
/nak= *number* or /noack	*For UNIX systems only.* Specifies the number of segments between negative acknowledgments (NAKs). If the remote system is a DECnet-Plus node, this parameter is ignored.
/back= *number* or / noback	*For UNIX systems only.* Specifies the number of segments before back pressuring. If the remote system is a DECnet-Plus node, this parameter is ignored.
/transport=dna_nsp or dna_tp4	*For UNIX systems only.* Defaults to the first available protocol tower.

3.12.2. Example of dts/dtr Data Test Command

This command invokes the data test with the sink subtest (by default). The dts program sends messages to dtr on node JONES (by default from a previous command). The message size is 512 bytes, and the test lasts 30 seconds. The transport protocol is printed only when you specify a transport.

```
dts> data/size=512/seconds=30
 DTS -I- Test started at 11:23:30
 DTS -I- Test finished at 11:24:00

Test parameters:
     Target node            "jones"
     Test duration (sec)    30
     Message size (bytes)   512

Summary statistics:
     Total messages SENT     48
     Total bytes SENT        24576
     Messages per second     1.60
     Bytes per second        819.20
     Line throughput (baud)  6553
```

3.13. Running dts/dtr Disconnect Tests

You can perform the following disconnect tests:

Test	Description
Disconnect without data	The dtr node sends a disconnect message that does not contain user data to the dts node.
Abort without user data	The dtr node sends an abort message that does not contain user data to the dts node.
Disconnect with standard user data	The dtr node sends a disconnect message that contains a standard string of optional data to the dts node. If the transport is NSP, this is 16 bytes, and if the transport is TP4, it is 32 bytes.

Test	Description
Abort with standard user data	The `dtr` node sends an abort message that contains a standard string of optional data to the `dts` node. If the transport is NSP, this is 16 bytes, and if the transport is TP4, it is 32 bytes.
Disconnect with received connect user data used as disconnect user data	The `dts` node sends a message containing optional user data to the `dtr` node. The `dtr` node returns a disconnect message containing the same optional data to the `dts` node.
Abort with received connect user data used as abort user data	The `dts` node sends a message containing optional user data to the `dtr` node. The `dtr` node returns an abort message containing the same optional data to the `dts` node.

3.13.1. dts/dtr Disconnect Test Command Syntax

Invoke `dts` and use the following command to start a `disconnect` test:

`disconnect [qualifiers][test-specific-qualifiers]`

The following table describes the *`test-specific-qualifiers`*.

Qualifier	Description	
`type= subtest`	Specifies the type of test, where *`subtest`* can be:	
	`synchronous`	Synchronous disconnect test for UNIX systems only
	`abort`	Disconnect abort test (default)
`/return= type` or `/noreturn`	Specifies the type of data returned by `dtr`. The `type` can be:	
	`standard`	Standard user data
	`received`	Received user data
	The `/noreturn` qualifier causes no optional user data to be returned (default).	

3.13.2. Example of dts/dtr Disconnect Test Command

This command invokes a `synchronous disconnect` test with remote node PARIS.

```
dts> disconnect/nodename=paris/type=synchronous
```

The `dtr` program will not return any optional user data.

3.14. Running dts/dtr Interrupt Tests

You can perform the following interrupt tests:

Test	Description
Sink test	The `dtr` program ignores all interrupt data received. No sequence or content validation is performed.

Test	Description
Sequence test	Interrupt messages transmitted by `dts` to `dtr` contain a 4-byte sequence number. If a message is received out of sequence, `dtr` aborts the logical link and the test.
Pattern test	Interrupt messages transmitted to `dtr` have both a sequence number and a standard data pattern. If neither the sequence number nor the data pattern received matches the expected data, `dtr` aborts the logical link and the test.
Echo test	Interrupt messages received by `dtr` are transmitted back to `dts`, which checks the sequence number and data of the returned messages. If either is incorrect, `dts` aborts the link and the test.

3.14.1. Interrupt Test Command Syntax

Invoke `dts` and use this command to start an `interrupt` test:

`interrupt [qualifiers][test-specific-qualifiers]`

The following table describes the *`test-specific-qualifiers`*:

Qualifier	Description	
/`type=` *`subtest`*	Specifies the type of test, where subtest can be:	
	`sink`	Sink test (default)
	`sequence`	Sequence test
	`pattern`	Pattern test
	`echo`	Echo test
	`size=` *`number`*	Specifies data message length in bytes, where *`number`* is a value from 0 to 16 (default = 16). The minimum value for *`number`* on a sequence test is 4 and on a pattern test is 5. The minimum value for *`number`* on an echo test is 5.
`test-duration`	Specifies duration of the test in one of the following formats:	
	`seconds=` *`number`*	Range: 1 to 60 (1 to 59 on OpenVMS)
	`minutes=` *`number`*	Range: 1 to 60 (1 to 59 on OpenVMS)
	`hours=` *`number`*	Range: 1 to 24
	The default is `seconds=15`.	
/`rqueue=` *`number`* or /`squeue=` *`number`*	*For UNIX systems only*. Specifies number of pending receives for `dtr` to maintain, where *`number`* is a value from 1 to 16 (default=1). If the remote system is a DECnet-Plus node, this parameter is ignored.	

3.14.2. Example of dts/dtr Interrupt Test Command

This command invokes the `interrupt` test with the `pattern` subtest. The `dts` program sends interrupt messages to `dtr` on node DALLAS, where test information is to be printed. The default message size value is used and the test lasts for 30 seconds.

```
dts> interrupt/nodename=dallas/print/type=pat/seconds=30

 DTS -I- Test started at 17:44:10
 DTS -I- Test finished at 17:44:40

Test parameters:

Target node                "dallas"
Test duration (sec)        30
Message size (bytes)       16

Summary statistics:
Total messages SENT        2734
Total bytes SENT           43744
Messages per second        91.1
Bytes per second           1458
Line throughput (baud)     11665
```

Chapter 4. Solving Problems Using DECnet Over TCP/IP

This chapter describes solving problems using DECnet over TCP/IP.

Topics In This Chapter

The topics in this chapter are:

- Local IP Address Displays As 0.0.0.0 (*Section 4.1, "Local IP Address Displays As 0.0.0.0"*)
- Troubleshooting (*Section 4.2, "Troubleshooting"*)

4.1. Local IP Address Displays As 0.0.0.0

Some TCP/IP products do not support a "read local address" function through the PWIP (PATHWORKS Internet Protocol) driver interface. As a workaround, OSI transport tells Session Control/Node Agent that the node local IP address is 0.0.0.0.

Therefore, the following address is correct:

```
NCL> SHOW NODE 0 address
     Address                           =
       {
           (
           [ DNA_CMIP-MICE ] ,
           [ DNA_SessionControlV3 , number = 19 ] ,
           [ DNA_OSItransportV1 , 'DEC0'H ] ,
           [ DNA_OSInetwork , 49::00-33:AA-00-04-00-FF-FF:21 ]
           ) ,
           (
           [ DNA_CMIP-MICE ] ,
           [ DNA_SessionControlV2 , number = 19 ] ,
           [ DNA_OSItransportV1 , 'DEC0'H ] ,
           [ DNA_IP , 0.0.0.0 ]
           ) ,
           (
           [ DNA_CMIP-MICE ] ,
           [ DNA_SessionControlV3 , number = 19 ] ,
           [ DNA_NSP ] ,
           [ DNA_OSInetwork , 49::00-33:AA-00-04-00-FF-FF:20 ]
           )
       }
```

4.2. Troubleshooting

If you have problems getting DECnet over TCP/IP to start up properly, check the following:

1. Verify that you have an OSI transport template with network service attribute defined as RFC 1006.

   Issue the command:

```
NCL> SHOW OSI TRANSPORT TEMPLATE * WITH NETWORK SERVICE = rfc1006
```

If you do not have a template defined, then you must execute NET$CONFIGURE Option 4 and replace your OSI transport startup script.

2. Verify that you have started TCP/IP, and that your product supports the PWIP interface. If you are using VSI TCP/IP Services for OpenVMS, be sure that you have executed the following command procedure:

```
SYS$STARTUP:UCX$PWIP_STARTUP.COM
```

3. Verify that the PWIP interface is properly registered. Using the management tool of the TCP/IP product installed, verify that the RFC 1006 listener ports defined in OSI transport are known by TCP/IP.

   If you are running VSI TCP/IP Services for OpenVMS, use the following command:

```
$ UCX SHOW DEVICE
                            Port                        Remote
Device_socket  Type    Local  Remote  Service           Host

  bg3         STREAM      23       0  TALENT           0.0.0.0
  bg4         DGRAM      520       0                   0.0.0.0
  bg7         STREAM     399       0                   0.0.0.0
  bg9         STREAM     102       0                   0.0.0.0
```

   In this case, we are looking for the two listen ports 399 and 102.

   If IP addresses work and IP names do not, use your TCP/IP management tool to verify that your BIND server knows about the name.

Chapter 5. Solving DECnet-Plus Application Problems

This chapter describes how to isolate and correct common DECnet-Plus application problems.

Definition

In this chapter, the term **DECnet/OSI applications** refers to FTAM, Virtual Terminal (VT), and any application that uses the OSI Applications Kernel (OSAK) application programming interface (API).

This manual does not discuss other applications considered to be OSI applications, such as X.400 products.

Topics in This Chapter

The topics in this chapter are:

- Underlying Components for DECnet-Plus Applications (OpenVMS Only) (*Section 5.1, "Underlying Components for DECnet/OSI Applications (OpenVMS Only)"*)
- Underlying Components for DECnet-Plus Applications (UNIX Only) (*Section 5.2, "Underlying Components for DECnet/OSI Applications (UNIX Only)"*)
- Symptoms of DECnet-Plus Application Problems (*Section 5.3, "Symptoms of DECnet-Plus Application Problems"*)
- Isolating DECnet-Plus Application Faults (*Section 5.4, "Isolating DECnet-Plus Application Faults"*)
- Using Event Logging and Log Files (*Section 5.5, "Using Event Logging and Log Files"*)
- Isolating Faults Using Management Tools (OpenVMS Only) (*Section 5.6, "Isolating Faults Using Management Tools (OpenVMS Only) "*)
- Tracing Overview (*Section 5.7, "Tracing Overview"*)
- Tracing Outbound FTAM and Virtual Terminal Connections (*Section 5.8, "Tracing Outbound FTAM and Virtual Terminal Connections"*)
- Tracing Inbound FTAM and Virtual Terminal Connections (*Section 5.9, "Tracing Inbound FTAM and Virtual Terminal Connections"*)
- Reading Trace Files (*Section 5.10, "Reading Trace Files"*)
- Correcting FTAM Application Problems (*Section 5.11, "Correcting FTAM Application Problems"*)
- Correcting FTAM File-Handling Problems (*Section 5.12, "Correcting FTAM File-Handling Problems"*)
- Correcting General FTAM Connection Problems (*Section 5.13, "Correcting General FTAM Connection Problems"*)
- Correcting FTAM and Virtual Terminal Connection Problems (Only) (*Section 5.14, "Correcting FTAM and Virtual Terminal Connection Problems (UNIX Only) "*)

- Correcting FTAM and Virtual Terminal Responder Problems (Only) (*Section 5.15, "Correcting FTAM and Virtual Terminal Responder Problems (OpenVMS Only)"*)
- Correcting FTAM and Virtual Terminal Responder Problems (Only) (*Section 5.16, "Correcting FTAM and Virtual Terminal Responder Problems (UNIX Only)"*)
- Correcting FTAM Environment Problems (OpenVMS Only) (*Section 5.17, "Correcting FTAM Environment Problems (OpenVMS Only) "*)
- Correcting Target SAP Connection Problems (*Section 5.18, "Correcting Target SAP Connection Problems"*)
- Correcting Problems with Applications Using OSAK (*Section 5.19, "Correcting Problems with Applications Using OSAK"*)

5.1. Underlying Components for DECnet/OSI Applications (OpenVMS Only)

Figure 5.1, "Underlying DECnet/OSI Components (OpenVMS)" shows the underlying DECnet/OSI components that DECnet/OSI applications on OpenVMS systems use. Use this information as a guide during fault isolation.

Figure 5.1. Underlying DECnet/OSI Components (OpenVMS)

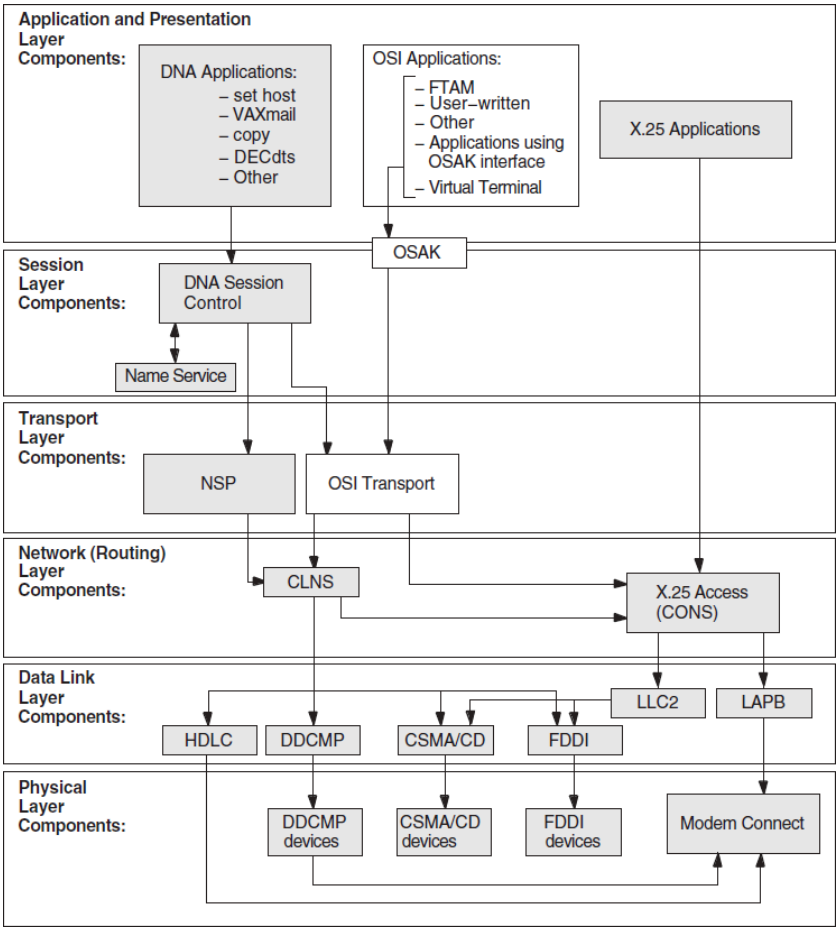

5.2. Underlying Components for DECnet/OSI Applications (UNIX Only)

Figure 5.2, "Underlying DECnet/OSI Components (UNIX)" shows the underlying DECnet/OSI components used by DECnet/OSI applications on UNIX systems. Use this information as a guide during fault isolation.

Figure 5.2. Underlying DECnet/OSI Components (UNIX)

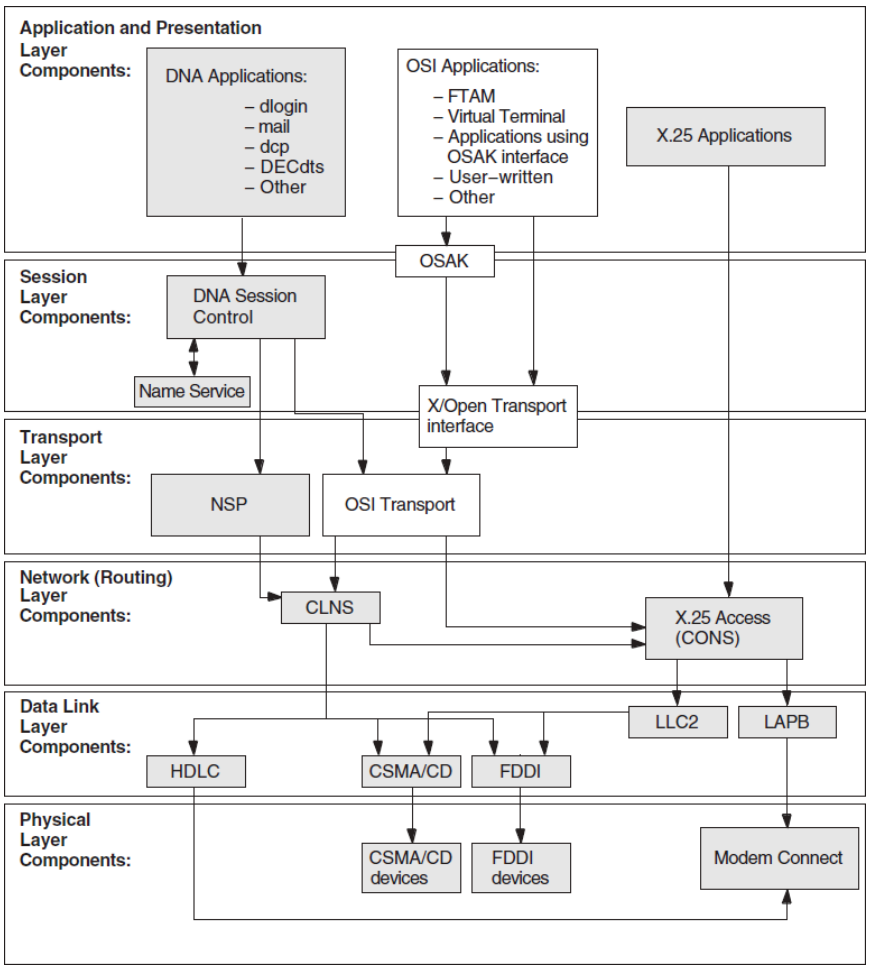

5.3. Symptoms of DECnet-Plus Application Problems

The following tables show the symptoms of possible DECnet-Plus application problems on both OpenVMS and UNIX systems, on OpenVMS systems only, and on UNIX systems only.

5.3.1. Problem Symptoms for All Systems

Table 5.1, "Symptoms and Problems for All Systems" describes DECnet-Plus application problems that can occur on either OpenVMS or UNIX systems.

Table 5.1. Symptoms and Problems for All Systems

Symptom	Possible Problem	See:
Connection attempts fail.	Reasons for failure include: ● User name, password, or both used in commands are incorrect. ● A responder is not listening on the remote address that the initiator specified. ● Errors exist in the local database file.	Section *Section 5.11, "Correcting FTAM Application Problems"* or *Section 5.13, "Correcting General FTAM Connection Problems"*.
An FTAM or Virtual Terminal responder fails.	Reasons for failure include: ● The requested transport provider is not available. ● The command syntax used to start an operation was entered incorrectly. ● An error exists in the format specified in the command line or the local database file. ● Multiple OSI applications are using the same transport selector.	Section *Section 5.11, "Correcting FTAM Application Problems"*, *Section 5.14.1, "Address in Use"*, or *Section 5.16, "Correcting FTAM and Virtual Terminal Responder Problems (UNIX Only)"*.
An FTAM file does not have the expected attributes.	Requested format is not supported and must be converted.	*Section 5.12.2, "Correcting File Problems"*.
A user-written OSI application terminates unexpectedly.	Reasons for failure include: ● Protocol ● Network ● Loss of network connection ● Remote entry aborted connect	*Section 5.19, "Correcting Problems with Applications Using OSAK"* or FTAM API documentation.
A problem with a user-written application affects the OSAK software.	There is a coding error in the application or in the way the application uses the OSAK application programming interface.	*Section 5.19, "Correcting Problems with Applications Using OSAK"* or OSAK documentation.

5.3.2. Problem Symptoms for OpenVMS Systems Only

Table 5.2, "Symptoms and Problems for OpenVMS" describes DECnet-Plus application problems that can occur on OpenVMS systems only.

Table 5.2. Symptoms and Problems for OpenVMS

Symptom	Possible Problem	See:
Connection attempts fail.	Reasons for failure include: ● OpenVMS environment is not set up correctly. ● FTAM application is not set up correctly. ● A responder is not listening on the remote address that the initiator specified. ● A remote entity sent a refuse PDU.	Section *Section 5.13, "Correcting General FTAM Connection Problems"*, *Section 5.17, "Correcting FTAM Environment Problems (OpenVMS Only) "*, or *Section 5.15, "Correcting FTAM and Virtual Terminal Responder Problems (OpenVMS Only)"*.
An FTAM responder fails.	There is a problem with the OSAK$SERVER_V3.	*Section 5.13, "Correcting General FTAM Connection Problems"*.
A VT responder terminates unexpectedly.	Resources are exhausted.	*Section 5.15, "Correcting FTAM and Virtual Terminal Responder Problems (OpenVMS Only)"*.
A VT responder will not start.	Another responder is already running.	*Section 5.15, "Correcting FTAM and Virtual Terminal Responder Problems (OpenVMS Only)"*.

5.3.3. Problem Symptoms for UNIX Systems Only

Table 5.3, "Symptoms and Problems for UNIX" describes DECnet-Plus application problems that can occur on UNIX systems only.

Table 5.3. Symptoms and Problems for UNIX

Symptom	Possible Problem	See:
Connection attempts fail.	Reasons for failure include: ● A listener and responder need to be running on the same system (for example, for a gateway node). ● A listener/responder is not listening on the remote address that the initiator specified.	*Section 5.14, "Correcting FTAM and Virtual Terminal Connection Problems (UNIX Only) "*.

Symptom	Possible Problem	See:
	• Syntax for alias entry in the local database file `/etc/isoapplications` is wrong. • An incorrect transport template was specified in the local database file `/etc/isoapplications`. • A remote entity sent a refuse PDU.	
An FTAM or VT responder fails.	There is a problem with the `ftam_listener` or `vt_listener` process.	*Section 5.16, "Correcting FTAM and Virtual Terminal Responder Problems (UNIX Only)".*

5.4. Isolating DECnet-Plus Application Faults

Before trying any correction procedures, confirm that you have a DECnet-Plus application problem. Use an application other than the one that failed, such as `dlogin` or `set host`, to try to establish a connection to the remote node.

If you can establish a connection, a problem with the failed application is likely the cause; use the trace utilities for further fault isolation. If you cannot establish a connection, the problem is probably not application-specific; use the network reachability tests described in *Chapter 3, "Testing Network Reachability"*, or check the underlying components that the application uses.

5.4.1. Tools to Use

Table 5.4, "Tools for Isolating Application Faults" shows the tools you can use to isolate DECnet-Plus application faults.

Table 5.4. Tools for Isolating Application Faults

For Problems with:	Use:	And See:
Any DECnet-Plus application	Error messages: • Check error messages displayed on the user's terminal. • Check error messages displayed on the system console. • On UNIX, check the `/usr/adm/syslog.dated/*/daemon.log` file. • On OpenVMS for FTAM, check `osif`	OSI application documentation and *Section 5.5, "Using Event Logging and Log Files"*.

For Problems with:	Use:	And See:
	`$responder.log` file located in your default login directory.	
	Tracing utility, `ositrace`.	*Section 5.8, "Tracing Outbound FTAM and Virtual Terminal Connections"*.
DECnet-Plus applications on OpenVMS systems	Event logging.	OSAK, FTAM and Virtual Terminal documentation.
FTAM and Virtual Terminal on OpenVMS systems	OSAK application database and `sys$system:isoapplications.dat` file.	FTAM/VT documentation.
Applications that use OSAK software	OSAK trace utility.	OSI application documentation or the OSAK programming documentation.

5.4.2. References

Refer to your FTAM and Virtual Terminal documentation for further information about these applications. Refer to your OSAK documentation for information about applications that utilize the OSAK API.

5.5. Using Event Logging and Log Files

On OpenVMS systems, event logging and log files help you isolate FTAM and Virtual Terminal problems. After you enable logging, the system writes events to the `sys$manager:operator.log` file.

On UNIX systems, FTAM and Virtual Terminal error messages appear on the operator's console. The system writes responder error messages to the `/usr/adm/syslog.dated/*/daemon.log` file. You do not need to do anything to enable error logging.

5.5.1. Enabling Network Event Logging (OpenVMS Only)

Enabling network event logging on an OpenVMS system can help you quickly identify FTAM or Virtual Terminal problems. Do the following to enable event logging of network and license events:

Step	Action
1	Enable OPER privileges with the following DCL command: `$ set process/priv=oper`
2	Ensure that OPCOM is running. If you do not know how to do this, get help from your system manager.
3	Do one of the following:

Step	Action
	● To display subsequent errors on a dedicated terminal, enable error logging to the terminal by entering the following DCL command: `$ reply/enable=(network,license)` ● Type the log file `sys$manager:operator.log` and examine it.
4	For events at the Data Link layer, specify the event types you want. For both X.25 and IEEE 802.3 events, see your NCL reference documentation. For X.25 events only, see your OSI Transport and X.25 documentation.

5.5.2. Using the FTAM Responder Log File (OpenVMS Only)

Each FTAM responder process on an OpenVMS system creates a log file of its activity during a process. If you are trying to track the responder's operations, this log file may contain pertinent information, depending on where the problem occurs.

Normally, a responder process creates a log file in the SYS$LOGIN directory of the account specified by the user on the FTAM command line.

Responder Log Set Up

Ensure that your system is set up correctly to use the responder log:

Step	Action
1	Check for WORLD:READ protection on `osif$responder.com`.
2	Check that the responder has WRITE access (for `osif$responder.log`) into the login account's default directory.
3	If you are using an account other than the default FTAM responder account, make sure that the account has a BYTLM of more than 20,000. If not, you may experience "service provider abort" errors.

5.6. Isolating Faults Using Management Tools (OpenVMS Only)

You can use management tools to isolate FTAM or VT faults on OpenVMS systems. Do the following when you use management tools for this purpose:

For this Connection:	Do the Following:	To Verify:
Inbound to a given address (FTAM only)	Use NCL commands to check inbound address in OSAK application database: `show osak application`	The following values: ● Presentation selector ● Session selector ● Transport selector

For this Connection:	Do the Following:	To Verify:
		• File name of responder command file • User name • Login password of user name (if any) (you need system privileges to do this) • Account name (optional) • AP-title (optional, not verified) • AE-qualifier (optional, not verified)
Outbound to a given address	Examine `sys$system: isoapplications.dat`	The following values: • Alias • Presentation selector • Session selector • Transport selector • OSI transport address (NSAP, TSAP, Provider) • AP-title (optional) • AE-qualifier (optional) • Session version (optional) • All field delimiters

5.7. Tracing Overview

Tracing allows you to examine FTAM and Virtual Terminal connections to other OSI systems. The trace operation traces the protocol data units (PDUs) that the Application, ACSE, Presentation, and Session layers send or receive. Tracing is a two-step process. First, you create a binary trace file during a regular FTAM or VT connection. Then you use the `ositrace` utility to convert the binary file to a readable text file.

5.7.1. Trace Files

The `ositrace` utility formats the binary trace information. You can redirect output into a file using appropriate mechanisms. By default, the file is written to the default output device.

The `ositrace` utility creates a new file for each trace in the default directory of the process where tracing is enabled. It also creates a new version of the trace file for each new connection it traces.

5.7.2. Security Information in Tracing

For either initiator or responder traces, if a file specification contains security information, the output for an FTAM or VT Protocol Control Information (PCI) trace contains the initiator identity (which maps to a user name) and the filestore password (which maps to a login password) in plain ASCII text. Trace files containing this information should be securely stored or deleted immediately after the trace data is analyzed.

5.8. Tracing Outbound FTAM and Virtual Terminal Connections

This section describes how to trace FTAM and Virtual Terminal connections to other OSI initiator systems. The original file that the trace operation creates contains binary information. The `ositrace` utility converts the binary file to a readable text file.

For OpenVMS Systems:	For UNIX Systems:
`define OSAK_TRACE ON`	`setenv OSAK_TRACE on`

The trace file is created in your current working directory with the name `init_xxxx.bin`, where `xxxx` is the time and date.

An alternate method of generating a trace for FTAM is to create the following definitions in the initiator process (OpenVMS only):

```
define osif$trace_enable FTAM_PCI, ACSE_PCI, PRESENTATION_PCI, SESSION
define osif$trace osif$init.trace
```

This creates the file `osif$init.trace`. It contains the same information as the trace generated by setting `OSAK_TRACE` to `ON`, and you can use `ositrace` to generate a readable form.

5.8.1. Generating a Readable Trace File

The command syntax for starting the `ositrace` utility is:

For OpenVMS Systems:	For UNIX Systems:
`ositrace` *`input-file [output-file]`*	`ositrace` *`[options] input-file [output-file]`*

The *`input-file`* specifies the binary trace file that is created when you define the trace logical names on OpenVMS systems or specify the `-T` option, or define the environment variables, on UNIX systems.

The *`output-file`* redirects the output to the specified file instead of displaying the output on the default device or file.

On OpenVMS, define OSITRACE:

```
$ OSITRACE:== $OSITRACE
```

5.8.2. ositrace Command Options (UNIX Only)

The trace records of all the components are processed by default if you do not specify one or more of the command options. *Table 5.5, "ositrace Command Options"* describes the `ositrace` command options on UNIX systems.

Table 5.5. ositrace Command Options

Option	Description
-h	Displays a brief help message that includes usage syntax and valid command options.
-F	Displays trace records only for the FTAM components. The trace monitors protocol control information (PCI) and file-access data unit (FADU) components. An FTAM PCI trace monitors the inbound and outbound FTAM service primitives. The trace output logs PCI octets and analyzes the FTAM PCI. An FTAM FADU trace monitors the inbound and outbound file structure data. The trace is formatted into two columns: the left column logs the octets of data and the right column logs the text equivalents of the octets.
-V	Displays trace records only for the Virtual Terminal components. The trace monitors protocol control information (PCI). A Virtual Terminal PCI trace monitors the inbound and outbound Virtual Terminal service primitives. The trace output logs PCI octets and analyzes the Virtual Terminal PCI. The trace is formatted into two columns: the right column logs the octets of data and the left column logs the text equivalents of the octets.
-A	Displays trace records only for the ACSE layer. The trace monitors the inbound and outbound ACSE service primitives. The trace output logs PCI octets and analyzes the ACSE PCI.
-P	Displays trace records only for the Presentation layer. The trace monitors the inbound and outbound presentation service primitives. The trace output logs presentation PDU (PPDU) octets and analyzes the presentation PCI.
-S	Displays trace records only for the session layer. The trace monitors the inbound and outbound session service primitives. The trace output logs session PDU (SPDU) octets and analyzes the session PCI.
-f	Filters timestamps. This option causes all timestamps to appear as the string xx-xxx-xxxx, xx:xx:xx and allows the comparison of two trace files using the `diff` command.

5.9. Tracing Inbound FTAM and Virtual Terminal Connections

This section describes how to trace FTAM and Virtual Terminal connections from other OSI systems.

5.9.1. Inbound FTAM and VT Tracing (UNIX)

- Log into the root account.
- Set the environment variable `OSAK_TRACE` to `on`.

  ```
  setenv OSAK_TRACE on
  ```

- Start a VT or FTAM listener.

  ```
  vt_listener mynode-alias
  ```

  This creates 10 `resp_xxxx.bin` files, where `xxxx` is the time and date. The default queue length is ten for the number of outstanding transport connect indications. The oldest `.bin` file contains the trace of the first association, the next youngest contains the second association, and so on.

- To stop the trace, kill the current listener process, and unset the `OSAK_TRACE` environment variable:

  ```
  ps auxw | grep ftam
     root 3380 0.0 ftam_listener mynode-alias

  kill -9 3380

  unsetenv OSAK_TRACE
  ```

5.9.2. Inbound FTAM Tracing (OpenVMS)

Edit the file `sys$system:osif$responder.com` to contain the following line:

```
$ define osak_trace on
```

The file `resp_xxxx.bin` is created in the default directory of the responder process, where `xxxx` is the time and date.

Alternatively, you can edit the file `osif$responder.com` to uncomment the following lines:

```
$! DEFINE /LOG osif$trace_enable FTAM-PCI,ACSE-PCI,PRESENTATION-PCI,SESSION
$! DEFINE /LOG osif$trace osif$responder.trace
```

The next inbound connection causes an FTAM trace file called `osif$responder.trace` to be created in the default login directory (SYS$LOGIN) of the specified account.

To trace the DAP gateway, you can choose one of the following options:

1. Define `osak_trace` in the file `sys$system:osif$gtwy_login.com`.
2. Define `osif$trace` and `osif$trace_enable` in the file `sys$system:osif $gtwy_login.com`.

The trace file will be created in the default directory of the OSIF$GTWY account.

The trace file created may then be formatted using `ositrace` as discussed in *Section 5.8.1, "Generating a Readable Trace File"*.

5.9.3. Inbound VT Tracing (OpenVMS)

- Stop the current VT responder `(SYS$STARTUP:VT_STOP.COM)`.
- Copy `SYS$SYSTEM:VTPAD.EXE` to `SYS$COMMON:[SYSEXE]VT_RESPONDER.EXE`.
- Define the logical name OSAK_TRACE to equate to the value ON.

  ```
  $ define osak_trace on
  ```

- Make sure your process has the following privileges:

CMKRNL, WORLD, SYSPRV, TMPMBX, SYSNAM, DETACH, NETMBX, SYSLCK, OPER, PRMMBX

- Issue the command:

```
RUN SYS$SYSTEM:VT_RESPONDER.EXE
```

At this point, the VT responder is executing in your process context, and eight(or the value specified by the `VT$VT_RJOBLIM` logical name) `resp_xxxx.bin` files will be created in your current directory.

As each new connection made to the VT responder terminates, a new `resp_xxxx.bin` file is created, and a previous `resp_xxx.bin` file now contains trace information. This is done in a first in, first out manner; the oldest `.bin` file contains the trace of the first association, the next youngest contains the second association, and so on.

Once you have collected all of the required trace data, use Ctrl/C and terminate the VT responder. Any `resp_xxxx.bin` files with a size of 0 may be deleted. `Resp_xxxx.bin` files which have non-zero sizes may be analyzed using `ositrace` (see *Section 5.8.1, "Generating a Readable Trace File"* for more information).

The regular VT responder may now be restarted using the SYS$STARTUP:VT_START.COM procedure.

The VT/LAT or VT/TELNET gateways may also be traced in a similar manner by copying VTPAD.EXE to VT_LAT_GTWY.EXE or VT_TELNET_GTWY.EXE respectively.

The LAT/VT or TELNET/VT gateways may be traced by copying VTPAD.EXE to LAT_VT_GTWY.EXE or TELNET_VT_GTWY.EXE respectively. However, the trace files produced will be named `init_xxxx.bin` to reflect the fact that we are now acting as an initiator.

5.10. Reading Trace Files

Open systems transmit PCI and file data in the form of octet strings. For each component being traced, the tracing utility logs the octets of PCI, file data, or both, sent or received by that component. The trace utility transcribes the octets into a sequence of hexadecimal digits. For PCI data, the utility also translates the data into ASN.1 (abstract-syntax notation). These translations correspond to the PCI definition of the component's service primitives. PCI definitions are part of the protocol specification of each FTAM or Virtual Terminal component.

You can compare tracing output to the corresponding PCI definition, to determine whether the encoding of PCI data is correct and whether the parameter values are valid. You can also compare the actual sequences of parameters with the valid sequences defined by the protocol. For information about FTAM and VT components, see your FTAM and Virtual Terminal documentation.

5.10.1. Interpreting Trace Information

The readable file that the `ositrace` utility creates contains the following information about the protocol data units (PDUs) for each traced layer (see the example in this section and in *Appendix B, "DECnet-Plus Application Tracing Examples"*):

1. A timestamp (day, date, and time) precedes the formatted textual output of the file that the trace utility generates. The timestamp indicates when the trace started. Another timestamp that indicates when the trace ended appears at the end of the file.

2. The time (hh:mm:ss) that the outbound or inbound PDUs were sent or received.

3. The direction of the PDUs: a left arrow (< -) indicates inbound PDUs and a right arrow (- >) indicates outbound PDUs.

4. The layer for which the PDUs are being traced: FTAM, Virtual Terminal (VT), ACSE, Presentation, or Session.

5. The hexadecimal dump of the PDUs formatted from left to right into eight columns of eight-character (1 octet) sequences.

6. The textual translation of PCI data in ASN.1 notation (columns 1-72), followed by the first three hexadecimal bytes of the hexadecimal sequence being described (columns 73-80).

Trace Example

```
❶ 10:11:57.08     OSI trace started Wed Jan 30 10:11:57 1992

❷ 10:11:58.20 ❸ -> ❹ Session
❺   0dff0148 05061301 00160102 14020002 33028080 34020103 c1ff0130 3180a080
    80010100 00a28081 02808082 020103a4 80308002 01010605 28c27b02 01308006
    02510100 00000030 80020103 060528c2 7b020230 80060251 01000000 00308002
    01050605 28c27b02 03308006 02510100 00000030 80020107 060528c2 7b020430
    80060251 01000000 00308002 01090606 2bce0f01 02023080 06025101 00000000
    30800201 0b060452 01000130 80060251 01000000 00000088 02060089 03054000
    61803080 02010ba0 7b6080a1 80060528 c27b0101 0000a280 06052bce 0f070100
    00a38002 01010000 be802880 020101a0 4da08082 01008302 03408403 05070085
    02058086 0100a780 4e0528c2 7b05014e 0528c27b 05024e05 28c27b05 034e062b
    ce0f0105 09000056 0776696e 63656e74 710a1908 6e69636b 73746572 00000000
    00000000 00000000 00000000
❻     connect-spdu                                              0d ff 01
       connect/accept-item                                          05 06
           protocol-options  = NULL                                 13 01
           version-number  = 2                                      16 01 02
       session-user-requirements  = '0000000000000010'B             14 02 00
       (duplex functional unit )
       calling-ssap-identifier  =                                   33 02 80
       called-ssap-identifier  =                                    34 02 01
       user-data                                                    c1 ff 01
```

5.11. Correcting FTAM Application Problems

Do the following if you isolate the problem as an FTAM application problem:

Step	Action
1	Check that the initiator ID (user name) is a valid identifier on the responder's system. For the FTAM responder, the initiator ID must be a valid user name for that system. If the user name requires a password, it must be supplied as well.
2	Check that the filestore password is a valid account password for the user name. For a FTAM responder, the filestore password must be the same as the login password.

Step	Action
	Not all FTAM vendors map the filestore password to the login password. If using third-party FTAM products, check the appropriate documentation for further information.
3	If an account field is being sent to the FTAM responder on an OpenVMS system, check that the field is valid (0 to 8 characters).
4	On OpenVMS, check that the remote account specified by the initiator has read and execute access to the responder account's login command file. On OpenVMS systems, if there is no login command file, check that the symbol LGICMD points at NL: (the null device).
5	On OpenVMS, check that the remote account specified by the initiator has read and execute access to the responder command file (for example, `osif $responder.com`).
6	Check that the protection on input directories and files allows remote reading.
7	Check that the protection on output directories allows remote writing.
8	Check the following in the local database file: ● For outbound connections, check that an alias is defined in the alias database. ● Remember that aliases and their definitions are assumed to be all uppercase on OpenVMS, because OpenVMS is not case-sensitive. Because UNIX is case-sensitive, interoperability problems between UNIX and OpenVMS may occur if you do not use mixed-case address definitions carefully. Therefore, VSI recommends that you use only uppercase address definitions for PSEL, SSEL, and TSEL when trying to communicate between case-sensitive and case-insensitive operating systems such as UNIX and OpenVMS. ● Make sure the local database entry specifies a correct AE-qualifier, AP-title, PSEL, SSEL, TSEL, and NSAP. If the PSEL, SSEL, TSEL entries are represented as ASCII characters, be sure the case is correct. ● Make sure that the NSAP, provider name, and template name are consistent and valid. For example, be careful not to mix RFC 1006 specifications with OSI specifications.

5.12. Correcting FTAM File-Handling Problems

This section contains suggestions for dealing with possible file-handling problems.

5.12.1. Checking Foreign Filename Formats

On OpenVMS systems, when specifying a foreign file name, you must enclose the name in double quotation marks (" "), so RMS does not parse the name. Enclose the file name in double quotation marks to preserve the case of the file name. It is best to ensure that all file names are in uppercase.

On UNIX systems, when specifying foreign file names, you must enclose the name in single quotation marks (' ').

Be aware that case sensitivity may be an issue when transferring files between OpenVMS and UNIX systems.

5.12.2. Correcting File Problems

If copied files appear to have extra characters, the remote FTAM implementation may be having problems handling the *ISO 8859* character set. You can identify this problem if you display a file and see repeated escape sequences in the data. These escape sequences are the *ISO 8859* character set identifiers. The remote FTAM implementation should have handled these. Refer to the supplier of that implementation for further information.

Other file problems may be related to the way the file was transferred. Problems can occur if the requested format is unsupported. The FTAM implementation must convert the file to a supported format before it can transfer it properly (see your FTAM management documentation). If an FTAM file on an OpenVMS system file does not look correct, the software probably transferred it as an FTAM-3 file, which is the default format.

Do the following to check FTAM file formats:

On OpenVMS Systems:	**On UNIX Systems:**
Enter this command: `$ dir/application_protocol=ftam/full filename`	Enter this command: `% ols -A application-name::file`

The displayed record tells you the format of the file, which can be:

- Stream – FTAM-1
- Variable Length – FTAM-2
- Undefined – FTAM-3

5.13. Correcting General FTAM Connection Problems

If your system environment is set up correctly and a connection attempt fails, do the following:

Step	**Action**

1	Check that the `osak$server_v3.exe` process (OpenVMS systems only) or the `ftam_listener` process (systems only) is running. Do the following:
	
	● On OpenVMS systems, do one of the following:
	
	• Enter the OpenVMS command `show system` and look for the processes:
	
	`OSAK$SERVER_V3`
	`OSAK$NETMAN`
	
	• Enter the following DCL command:

Step	Action

	`$ show process osak$server_v3.exe`
	
	If `osak$server_v3.exe` is running, a summary of the process appears.
	
	● On UNIX systems, enter the following command:
	
	`% ps axuw | grep ftam_listener`

2	If necessary, start the `osak$server_v3.exe` process (OpenVMS only) or the `ftam_listener` process (only) by doing one of the following:
	
	● On OpenVMS systems, start the `osak$server_v3.exe` process from a process with SYSPRV privileges by entering the following DCL commands:
	
	`$ @sys$startup:osak$start.com`
	`$ @sys$startup:osif$startup.com`
	
	● On UNIX systems, run the file `/etc/osi_applstartup` as root.

3	Invoke NCL and use the command `show node` to see if the OSI transport software is running. For example:
	
	`ncl> show node 0 osi transport state`
	
	If OSI transport is running, NCL displays a message stating that the status state equals `on`. For example:
	
	`Show Node 0 OSI Transport`
	`  at 199201-10-15::53.63400 + 00:00 I 00.00000`
	
	`Status`
	` State = On`
	
	If OSI transport is not running, NCL displays a message stating that the status state equals `off`. For example:
	
	`Show Node 0 OSI Transport`
	`  at 1992-01-10-15:41:53.63400 + 00:00 I 00.00000`
	
	`Status`
	` State = Off`

4	If OSI transport is not running, do one of the following: ● On an OpenVMS system, exit NCL and execute the OSI transport startup command file `sys$startup:osit$startup.com` from an account with SYSPRV. After restarting OSI transport, restart the OSAK $SERVER_V3.EXE. ● On a UNIX system, exit NCL and execute the file `/etc/start_osi_transport.ncl` as root.
5	Check that the underlying DECnet software is running. From a privileged account, type the following at the NCL prompt:

Step	Action
	`ncl> show session control state` The `state` should be `On`.
6	If you want to make a connection over an X.25 or Internet network from an OpenVMS system, you must have the X.25 software installed and running.

5.14. Correcting FTAM and Virtual Terminal Connection Problems (UNIX Only)

If no error messages appear when you try to establish a connection but the connection attempt fails, create an initiator trace for the command that failed, as described in *Section 5.8, "Tracing Outbound FTAM and Virtual Terminal Connections"*.

Use the procedures in the following sections if errors appear.

5.14.1. Address in Use

If the message is `Address in Use`, do the following:

Step	Action
1	Examine `/etc/isoapplications` for incorrect entries. Check that all entries contain the appropriate components and delimiters. If you find errors, correct them and retry the operation. If the file is correct, go to step 2.
2	Check that another process is not listening on the same transport address. Do the following: a. Use either the `ps axuw | grep ftam` or `ps axuw | grep vt` command to see if another process is running. b. If no process is running, use the following NCL command to look for descriptions of local transport selectors in use: `show osi transport * all` If any transport service access points TSAPs match the one that the `ftam_listener` or `vt_listener` is trying to use, then the `ftam_listener` or `vt_listener` must use a different one.

5.14.2. Network Is Unreachable

If the message is `Network is unreachable`, check that a listener/responder process is running on the remote node that can accept your connection request. There may be no way to reach the remote node.

Also, verify that the transport provider specified by the initiating entry is available on the responding entity.

5.14.3. Connection Refused

If the message is `Connection refused`, the Transport layer received a disconnect from the remote system. Retry the operation or specify a different remote node. You can also check a trace, if it exists, for a diagnostic message that indicates why the remote system refused the connection.

5.14.4. Connection Timed Out

If the message is `Connection timed out`, the remote node did not respond to your connection request. There may be no way to reach the remote node or no responder listening on the specified address.

5.15. Correcting FTAM and Virtual Terminal Responder Problems (OpenVMS Only)

Use the procedures in this section if an FTAM or VT responder on an OpenVMS system either terminates unexpectedly or will not start.

5.15.1. Correcting Unexpected Termination Problems

Try the following if an FTAM or Virtual Terminal responder on OpenVMS systems terminates unexpectedly:

Step	Action
1	Examine the operator log for events prior to the failure. If indicated, change system parameters.
2	If no error exists in the operator log, or if changing system parameters does not correct the problem, perform a trace of the operation.
3	Check that there are no problems with the OSI transport provider (see *Chapter 7, "Solving Transport Problems"*).

5.15.2. Correcting Responder Starting Problems

Try the following if an FTAM or Virtual Terminal responder on OpenVMS systems will not start:

Step	Action
1	Use the DCL command `show system` to check that a responder is not already running on the same node. The application startup file usually prevents this from happening; check the startup file to see if it was incorrectly modified.
2	Check the alias database to see if another application is using the same TSAP.
3	Check that there are no problems with the OSI transport provider (see *Chapter 7, "Solving Transport Problems"*).

5.16. Correcting FTAM and Virtual Terminal Responder Problems (UNIX Only)

Try the following if you have FTAM or Virtual Terminal responder problems on UNIX systems:

Step	Action
1	If the responder does not start, check the `/usr/adm/syslog.dated/*/daemon.log` file for errors that the `ftam_listener` or `vt_listener` generated. If no errors exist, go to step 2.
2	Start the responder (using `ftamd` or `ologind`) at the terminal and use the tracing option to generate a trace file.
3	Correct errors indicated by the trace file.
4	Make sure the addresses and transport options specified in the `/etc/isoapplications` file are correct.

5.17. Correcting FTAM Environment Problems (OpenVMS Only)

FTAM connections to remote systems can fail if the OpenVMS environment is not set up correctly. If any connections fail, first check that the size of the `sysgen` parameter, `maxbuf`, is at least 2048.

If inbound connections fail, check the following items in your OpenVMS environment:

Step	Action
1	Check the address database: • Make sure a valid user name and password are specified for the local application address. • Make sure the AP-title, AE-qualifier, PSAP, SSAP, TSAP, and NSAP on both the initiating and responding systems are correct and match.
2	Make sure the responder's default directory has write access and sufficient space for writing log files.
3	Check the local account where the responder runs to see that: • BYTLM is set to at least 20,000 bytes. • The account allows network operation (NETMBX and TMPMBX privileges). • NETWORK is enabled for the account in AUTHORIZE. • If a restricted account is used, an accessible `login.com` file exists, or the symbol LGICMD points to NL: (the null device).
4	Check to see if maximum activity levels are being exceeded for networking processes, transport connections, X.25 connections, and other processes.

Step	Action
5	Check the disk to make sure it: ● Has sufficient space to receive an inbound data transfer. Use the FTAM command `directory/app=ftam/size= all` to determine the blocks used and blocks allocated for a file on any FTAM system on your open-systems network. ● Is not write-locked.

5.18. Correcting Target SAP Connection Problems

Connections can fail if a problem with a specific service access point exists. The following procedures describe how to correct problems in the OSI layers.

5.18.1. Correcting FTAM Physical and Data Link Problems

Do the following to verify that the network topology can reach the remote system:

Step	Action
1	On OpenVMS systems only, look at the DECnet OPCOM messages to check that the remote system is available. On UNIX systems only, check the `/usr/adm/syslog.dated/*/daemon.log` file.
2	Check that the physical network wires are connected.

5.18.2. Correcting Network Connection Problems

Use NCL commands to do the following:

For Direct X.25 Access:

Step	Action
1	Check that the X.25 address in use is correct: ● For inbound connection attempts, ensure that the source system uses your DTE address and the appropriate subaddress or call value (if used). Source systems would use the transport subaddress of your X.25 transport template. If Call User Data is used in place of a subaddress, ensure that the value of the Call User Data is correct. Some systems do not send out Call User Data by default.

Step	Action
	● For outbound connection attempts, ask the target system manager to verify the DTE address and transport subaddress that form the X.25 address in your OSI transport address. Some systems require that Call User Data 03010100 be present to select the ISO transport application at the target system. Ensure that the value of the Call User Data, if used, is correct.
2	Check that both systems are using the agreed-upon call value for the network.
3	Check local DNIC usage to determine if it needs a leading zero (0) or one (1).
4	Check to see if international DNIC usage is always required.
5	See the X.25 problem-solving documentation for further assistance.

For Direct IEEE 802 Access:

Step	Action
1	Check that the physical address in use is correct. Do the following: ● For inbound connection attempts, ensure that the remote system uses the physical address for the Ethernet device that connects your system to the IEEE 802 subnetwork shared by your systems. ● For outbound connection attempts, ask the target system manager to verify the physical address that you are using in your OSI transport address.

For Internet Access:

Step	Action
1	Check that the NSAP addressing information is correct: ● Check that the specified transport provider is `rfc1006`. ● Check that the specified NSAP is a 4-byte Internet address. ● For inbound connection attempts, ensure that the remote system manager is using a valid network service access point (NSAP) address in the iso applications database. ● For outbound connection attempts, ask the system manager of the target system to verify that the NSAP address specified in your OSI transport address identifies the NSAP of the target system.
2	Check that the adjacency addressing is defined and is correct:
	For X.25 subnetwork access: ● For inbound connection attempts, ensure that the adjacent system uses your DTE address and the appropriate subaddress (if used). Adjacent systems would use the transport subaddress of your X.25.

Step	Action
	● For outbound connection attempts, ask the adjacent system manager to verify the DTE address and Internet subaddress that form the X.25 address in your adjacency address. ● Check that both systems are using the agreed-upon call value for the subnetwork.
	For IEEE 802 subnetwork access: ● For inbound connection attempts, ensure that the adjacent system uses the physical address for the Ethernet device that connects your system to the IEEE 802 subnetwork shared by your systems. ● For outbound connection attempts, ask the adjacent system manager to verify the physical address that you are using in your adjacency address. ● Check that the routing database is correct for the current configuration. Use NCL to confirm that the target system is assigned the correct adjacency address. Also, if other types of routing information are required as indicated in your OSI transport management documentation, ensure those values are correct. Run an OSI transport trace to learn whether the Internet packets are getting through. See your OSI transport documentation for further information.

5.18.3. Correcting FTAM and VT Transport Problems

Do the following to correct transport problems:

Step	Action
1	Check that the transport selectors for the initiator and responder match. The transport selector is the right-hand selector in an upper-layer address. On OpenVMS systems, display any upper-layer address defined for a responder or initiator. For example: ● For inbound connections, use the NCL command `show osak application * paddress`. ● For outbound connections, check the file `sys $system:isoapplications.dat`. On UNIX systems, check the `/etc/isoapplications` file.
2	Check the format of the TSAP value to see if it is hexadecimal or ASCII.
3	Make sure that timers are not causing a disconnect too quickly; for example, the keepalive timer of the network service should be used.
4	Check that the correct transport template name is in use.
5	If you use Internet, check the addresses used and routing table entry.

Step	Action
6	If you use null Internet, check the OSI transport template to see if the inactive area address supplied matches the routing circuit.
7	Look at the transport counters to see if the transport software is working. See your DECnet-Plus management documentation for further information.

5.18.4. Correcting FTAM and VT Session Problems (OpenVMS Only)

Do the following to correct FTAM and VT problems at the Session layer on OpenVMS systems:

Step	Action
1	Check that the session selectors for inbound and outbound connections match. The session selector is the middle selector in an upper-layer address. For inbound connections, if you need addressing information for the FTAM responder, use the NCL command `show osak application`. For outbound connections, check the file `sys $system:isoapplications.dat`.
2	Check that the session versions of the two systems are compatible. An FTAM responder can accept either version 1 or 2. If both versions are proposed on an F-INITIALIZE indication, the responder chooses version 2. By default, an FTAM initiator proposes version 2. However, you can override the default by entering version 1 or versions 1 and 2 into the alias entry for a given remote application. To define the session version for an alias, edit the alias entry in `sys $system:isoapplications.dat`.
3	Check whether the values used are hexadecimal or ASCII, and whether the values are correct.

5.18.5. Correcting FTAM and VT Presentation Problems (OpenVMS Only)

Do the following to correct connection problems at the Presentation layer:

Step	Action
1	Check that the presentation selectors on the initiator and responder systems match. The presentation selector is the left-hand selector in an upper-layer address. For inbound connections, if you need addressing information for the FTAM responder, use the NCL command `show osak application`.

Step	Action
	For outbound connections, check the file `sys $system:isoapplications.dat`.
2	Check if there are common syntaxes for ACSE-PCI, FTAM-PCI, FTAM-FADU, unstructured binary, and unstructured text. FTAM uses the basic encoding rules of a single ASN.1 type as its transfer syntax.
3	Check whether the values used are hexadecimal or ASCII, and whether the values are correct.

5.19. Correcting Problems with Applications Using OSAK

OSI application failures can indicate that a problem exists with their use of the OSI Applications Kernel (OSAK) software. Check the application's documentation to determine if the application has any dependencies on the OSAK software or uses the OSAK application programming interface.

Refer to the following documentation for more information about OSAK software and the OSAK application programming interface:

- DECnet-Plus network management documentation
- OSAK Programming and Programming Reference documentation
- Documentation for any applications that use the OSAK software

5.19.1. Correcting Connection Problems

Do the following if an application that uses OSAK software has connection problems:

Step	Action
1	Use the Common Trace Facility or the OSAK trace utility to get a transport trace and examine the output for the following: a. Check that a transport connection was established. There should be a Connect Confirm (CC) transport protocol data unit (TPDU) in the trace. b. If no CC TPDU exists, and the application uses the OSAK programming interface, check that the *called_aei* parameter that the initiator supplies matches the local address of the responder. c. Check that the Data Transfer (DT) protocol data unit (PDU) containing the upper-layer connect was received.
2	If possible, examine the application's log file to check that the local application received the upper-layer connect.
3	Check that quotas were not exceeded.

5.19.2. Correcting Unexpected Termination Problems

Do the following if the application terminates unexpectedly:

Step	Action
1	Check the OSAK event sink (OpenVMS only) or the NCL event sink (UNIX only) for evidence of protocol errors.
2	Create a transport trace using the OSAK trace utility, with the Errors option enabled. If errors exist, report them to the originator of the PDU; this is the local system for outbound messages and the remote system for inbound messages. There can be errors in the PDU that tracing cannot detect, so you cannot assume that the PDU is correct even if no errors are reported. If no errors exist, check the lower layers of your network.

5.19.3. Correcting Programming Problems

Do the following for programming problems:

Step	Action
1	Check that optional parameters are set to null.
2	Make sure you have sufficient workspace.
3	Check that you have allocated enough buffers.
4	Make sure that the application checks returned status information.

Chapter 6. Solving Session Control Problems

This chapter describes how to isolate and correct Network Architecture (NA) application faults that can be a result of a Session Control problem. NA application failures can also be a result of:

- Application-specific problems (refer to the application's documentation)
- Name service problems (see *Section 6.10, "Correcting Node Name Resolution Problems"*)

Topics In This Chapter

The topics in this chapter are:

- Underlying Components for Session Control (OpenVMS Only) (*Section 6.1, "Underlying Components for Session Control (OpenVMS Only)"*)
- Underlying Components for Session Control (UNIX Only) (*Section 6.2, "Underlying Components for Session Control (UNIX Only)"*)
- Symptoms of Session Control Problems (*Section 6.3, "Symptoms of Session Control Problems"*)
- Isolating Session Control Faults (*Section 6.4, "Isolating Session Control Faults"*)
- Correcting Unknown Application Problems (*Section 6.5, "Correcting Unknown Application Problems"*)
- Correcting Application Too Busy Problems (*Section 6.6, "Correcting Application Too Busy Problems"*)
- Correcting Access Control Problems (*Section 6.7, "Correcting Access Control Problems"*)
- Correcting Insufficient Resource Problems (*Section 6.8, "Correcting Insufficient Resource Problems"*)
- Correcting Timed Out Problems (*Section 6.9, "Correcting Timed Out Problems"*)
- Correcting Node Name Resolution Problems (*Section 6.10, "Correcting Node Name Resolution Problems"*)
- Examining the DECnet-Plus Naming Cache (OpenVMS Only) (*Section 6.11, "Examining the DECnet-Plus Naming Cache (OpenVMS Only)"*)

6.1. Underlying Components for Session Control (OpenVMS Only)

Figure 6.1, "Underlying Components for Session Control (OpenVMS)" shows the direct underlying components that the Session Control software on OpenVMS systems use. Use this information as a guide during fault isolation.

Figure 6.1. Underlying Components for Session Control (OpenVMS)

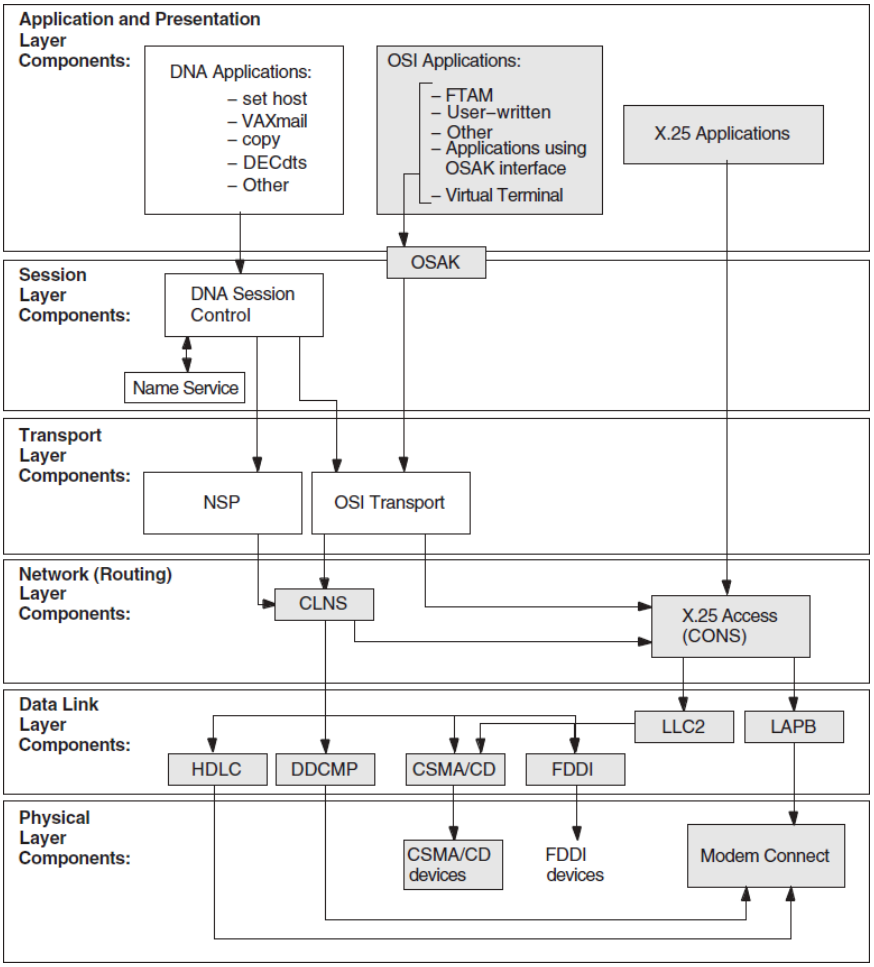

6.2. Underlying Components for Session Control (UNIX Only)

Figure 6.2, "Underlying Components for Session Control (UNIX)" shows the direct underlying components that the Session Control software on UNIX systems use. Use this information as a guide during fault isolation.

Figure 6.2. Underlying Components for Session Control (UNIX)

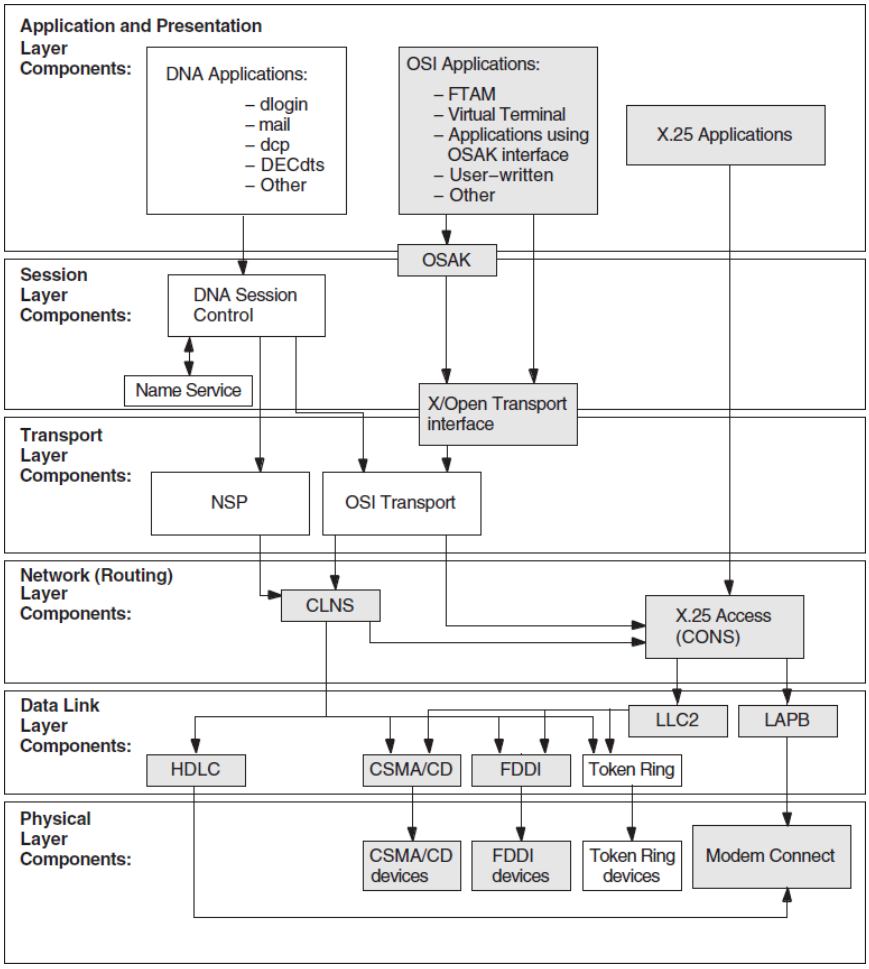

6.2.1. References

Refer to your application's documentation if you determine that an application-specific problem caused a failure. Refer to *Section 6.10, "Correcting Node Name Resolution Problems"* if you determine that a name service problem caused a failure.

6.3. Symptoms of Session Control Problems

The symptoms in *Table 6.1, "Symptoms of Session Control Problems"* indicate that the local system attempted to establish a connection to the remote system, but a problem with the Session Control software, or with the naming information that Session Control uses, prevented the requested operation from completing.

Table 6.1. Symptoms of Session Control Problems

Symptom	Possible Problem	See:
Unknown application at remote node or object is unknown at remote node	The address that the application used does not match the data in the Session Control application database on the remote node.	*Section 6.5, "Correcting Unknown Application Problems"*
	You attempted to connect to the wrong node.	

Symptom	Possible Problem	See:
Access control rejected	Proxy access is not defined correctly.	*Section 6.7, "Correcting Access Control Problems"*
	Node name validation on source node failed or an invalid user name or password was used.	*Section 6.7.3, "Correcting Node Name Validation Problems"*
Application too busy	The remote node is receiving too many connection requests before the application or the Session Control software can process them.	*Section 6.6, "Correcting Application Too Busy Problems"*
Remote node is unreachable	Incompatible tower information exists for the source and destination node.	*Section 6.10, "Correcting Node Name Resolution Problems"*
Session Control has insufficient resources	Maximum number of available ports are all in use.	*Section 6.8, "Correcting Insufficient Resource Problems"*
Timed out	Local cache did not contain the correct information and Session Control took too long to retrieve naming information from a remote server.	*Section 6.9, "Correcting Timed Out Problems"* or *Section 6.10, "Correcting Node Name Resolution Problems"*
	Outgoing or incoming request timer is set too low.	
	Server application does not declare itself (for example, on an OpenVMS system, when the application used IO$ACPCONTROL, GET_CONNECTION or during process creation).	
Wrong information displayed or wrong account accessed	Proxy entries on local node do not match those on the remote node and the system logs you in to a default user account.	Section *Section 6.7.2, "Correcting Proxy Access Problems (UNIX Only)"* or *Section 6.7.1, "Correcting Proxy Access Problems (OpenVMS Only) "*
Unable to obtain the address for a node	The name service is not available. The name service search path is not correctly set up.	*Section 6.10, "Correcting Node Name Resolution Problems"*

6.4. Isolating Session Control Faults

Session Control problems can be the cause of NA application failures that are not application specific. Session Control problems can occur because of:

- Name service problems (see *Section 6.10, "Correcting Node Name Resolution Problems"*)
- Session Control entity problems
- Transport layer problems (see *Chapter 7, "Solving Transport Problems"*)
- Network layer problems (see *Chapter 8, "Solving Network Layer Problems"*)

Before trying any correction procedures, do the following to isolate theproblem to the appropriate area:

Step	Action
1	Try to establish a connection using a different application. If the connection succeeds, an application-specific problem exists. Refer to the documentation for the application that failed. If the connection attempt fails, Session Control cannot complete the connection request. Continue fault-isolation procedures to determine if the problem is caused by the namespace operation, Session Control entity problems, or a lower-layer problem.
2	Check whether the remote node is reachable. Use quick reachability or loopback tests or trace the network path between the nodes. Or, try using a different source node to connect to the remote node. If the source node cannot reach the remote node, check the nodes in the path to determine the problem. If the remote node is reachable, go to the next step.
3	Attempt to connect to the remote node using the remote node's address. If the connection succeeds, check the naming information that Session Control uses. See *Section 6.10, "Correcting Node Name Resolution Problems"*. If the connection fails, check the lower-layer operation on the local and remote node (see Chapters *Chapter 7, "Solving Transport Problems"* and *Chapter 8, "Solving Network Layer Problems"*).

6.4.1. Tools and Commands to Use

To:	Use This Tool or Command:
Quickly confirm that remote node is reachable.	`set host` or `dlogin` with node address. If test succeeds, examine your DECdns namespace or local database.
Confirm the remote node is reachable.	Loopback tests, see *Section 3.1.1, "Types of Loopback Tests"*
Examine the Session Control component.	NCL Session Control commands
Check naming information.	Trace facility, see *Section 6.10, "Correcting Node Name Resolution Problems"*

6.4.2. Fault-Isolation Methodology

Use *Figure 6.3, "Fault-Isolation Methodology (Session Control)"* as a guideline for isolating Session Control faults.

Figure 6.3. Fault-Isolation Methodology (Session Control)

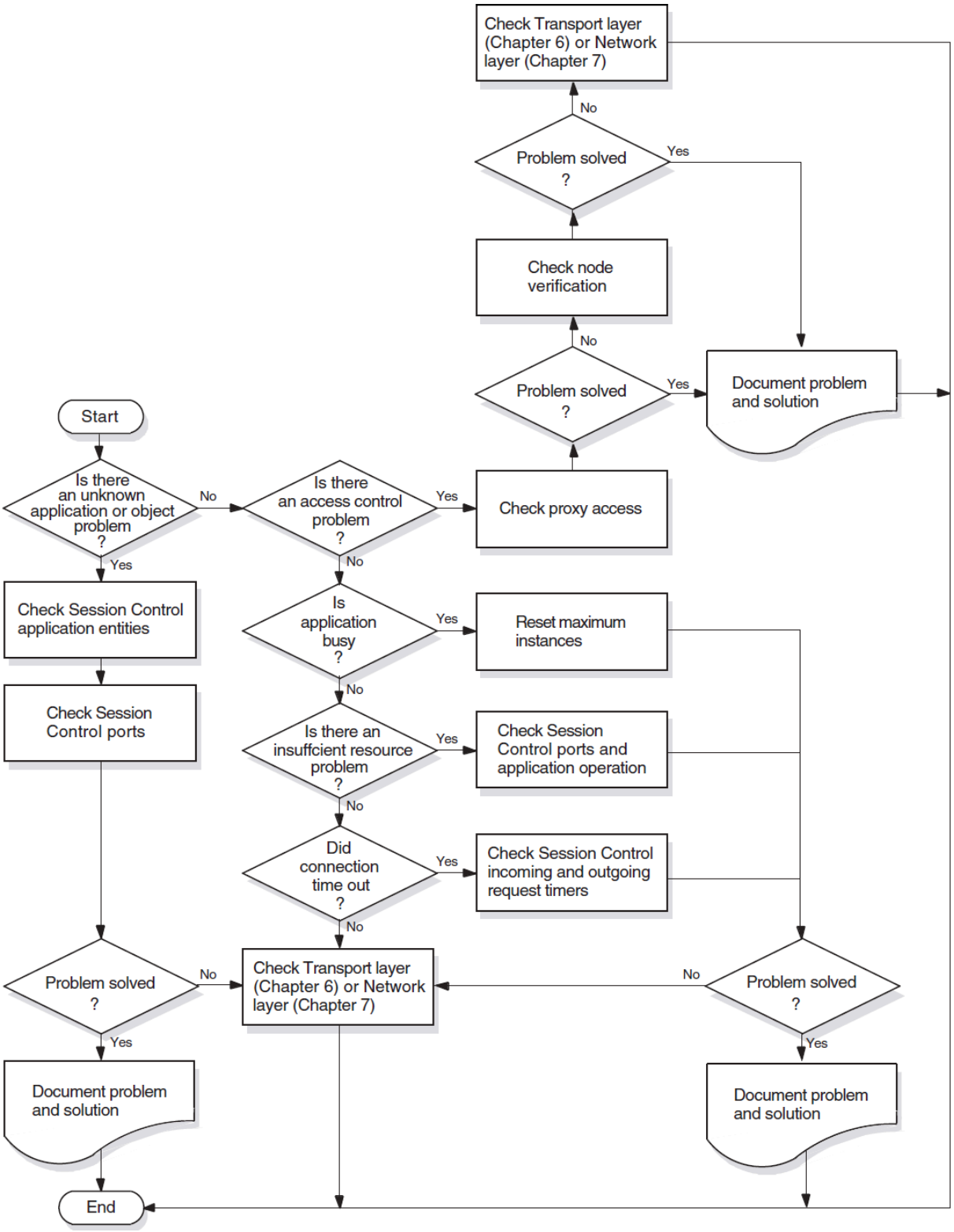

6.5. Correcting Unknown Application Problems

This type of message can appear if:

- The end-user specifications on the target system do not match the end-user specifications that the application uses on the originating system.
- The file that an application invokes on an incoming request exists and the account using it cannot execute the file.

Check that you (or the application) used the correct node name. If the correct node name was used, do the following to fix this problem:

Step	Action

1	Use the following NCL command to get information about applications that activate an image file or command procedure when they receive incoming requests (referred to as initiator applications):
	
	`ncl> show session control application * -`
	`_ncl> all characteristics`

2	Examine the display for the following information: ● Address – This is the application's object names or numbers. `number=XX` indicates the object number; `name=xxx` indicates the object = 0, with the specified name. ● User name – This is the account under which the application runs for default access. ● Image name – This is the file that is the target for the connection.

3	Identify the applications that are daemons (referred to as declared responders). Use one of the following NCL commands:
	
	For OpenVMS systems:
	
	● `ncl> show session control port * all attributes, -`
	`_ncl> with creation time > timestamp`
	
	● `ncl> show session control port * all attributes, -`
	`_ncl> with direction=incoming`
	
	For UNIX systems:
	
	● `ncl> show session control port * all attributes, -`
	`_ncl> with creation time > timestamp`
	
	● `ncl> show session control port * all attributes, -`
	`_ncl> with direction=listening`

4	Identify the local end user address. This address is the object name or number of the application. Use the following NCL command:

Step	Action
	`ncl> show session control port * -` `_ncl> local end user address`
5	Check the following: ● The value of the Address attribute and the object name or number that the originator of the incoming request used match these values on the remote node. ● The file indicated by the Image Name field: • If the file does not exist, copy it from another location or reinstall the application. • If the account specified in the User Name field cannot access the file, change the file's access so the account can use it. ● The value of the Local End User Address field and the object name or number that the originator of the incoming request used match these values on the remote node.

6.6. Correcting Application Too Busy Problems

If you occasionally receive an application too busy problem, retry the operation after a short wait. If you frequently receive this message, do the following:

Step	Action
1	Refer to the application's documentation to determine if the application is configured properly.

2	On UNIX systems: Check the `maximum instance` characteristic for the application. Use the following NCL command:
	`ncl> show session control application -`
	`_ncl> application-id all`
	If the `maximum instances` characteristic is equal to any value other than 0, it may be set too low. Use the following NCL command to reset this characteristic:
	`ncl> set session control application -`
	`_ncl> application-id maximum instance value`

6.7. Correcting Access Control Problems

Access control problems can occur if proxy access is not enabled correctly or if the software cannot find or validate specified node names. Do the following to determine what type of access control problem you have:

Step	Action
1	Make sure the user name that you or an application use is defined in the application or object database on the remote node.

2	Check to see if the failed application is checking for proxy access.
	
	For OpenVMS systems, see *Section 6.7.1, "Correcting Proxy Access Problems (OpenVMS Only) "*. For UNIX systems, use an NCL command similar to one of the following to look at the session control ports in use:
	
	`ncl> show session control port * proxy requested, -`
	`_ncl> with direction=listening`
	
	If the `proxy requested` status is false, either the application did not request proxy access or outgoing proxy on the remote node is not enabled. Refer to the application's documentation or the following proxy access correction procedures.

3	Check the session control tower maintenance database to ensure the node is registered correctly. Use the following NCL command:
	
	`ncl> show node node-id session control tower -`
	`_ncl> maintenance name all`
	
	You can use an asterisk (*) instead of the *`name`* to display information for all nodes.

6.7.1. Correcting Proxy Access Problems (OpenVMS Only)

Do the following to check the proxy access:

Step	Action
1	Invoke the `authorize` utility and use the following command to check the proxy account: `uaf> show/proxy *`
2	If the proxy account is not set up correctly, use `authorize` commands to reset the proxy account values.
3	If you cannot access the proxy account, check to see if Session Control created an intrusion record for your client account on the target node. Issue the following DCL command: `$ show intrusion`
4	If login attempts exceed the set acceptable number of times for the system, a break-in record will exist and the system may have disabled the account. Check the account using the `authorize` utility to see if the account was disabled.

6.7.2. Correcting Proxy Access Problems (UNIX Only)

Do the following to correct proxy access problems:

Step	Action
1	Look at the Outgoing Proxy characteristic on the originating node (client system). Use the following NCL command: `ncl> show session control outgoing proxy`
2	If the Outgoing Proxy characteristic on the originating node is FALSE, use the following NCL command to change it to TRUE: `ncl> set session control outgoing proxy true`

3	Look at the Incoming Proxy characteristic on the target node. Use the following NCL commands:
	
	`ncl> show session control incoming proxy`
	`ncl> show session control application`
	`_ncl> application-id incoming proxy`

4	If the Incoming Proxy characteristic on the target node is set to FALSE, use the following NCL commands to change it to TRUE:
	
	`ncl> set session control incoming proxy true`
	`ncl> set session control application -`
	`_ncl> application-id incoming proxy true`

5	Check that Session Control Proxy entities are defined correctly. Use the following NCL command:
	
	`ncl> show session control proxy name -`
	`_ncl> all characteristics`
	
	Look at the following characteristics:
	
	● Target user – Should specify a valid account on the target system.
	
	● Applications – If empty, any application can use the proxy. If applications are listed, only those applications can use the proxy.
	
	● Type – If explicit, the originating system must specify a target user name that matches the target name of the proxy entry.
	
	If default, the originating system does not need to specify a target user name.
	
	● Source end users – Must specify the source node and user name that matches the source node and user name on the originating system.

6	If proxy entry on remote node is not defined correctly, modify existing proxy entry. Use NCL commands similar to the following:
	
	`ncl> set session control proxy -`
	`_ncl> simple-name target user latin1-string, -`
	`_ncl> type default`
	
	`ncl> set session control proxy simple-name -`
	`_ncl> source  end users -`
	`_ncl> {[Node=node-id,End User=address]}`

Step	Action

7	If you need to allow more than one end user to use the proxy entry, add additional source end-user information. Use the following NCL command:
	
	`ncl> add session control proxy simple-name -`
	`_ncl> source  end users -`
	`_ncl> {[node =node-id, EndUser=id]}`

6.7.3. Correcting Node Name Validation Problems

A failure occurring when the remote system attempts to validate a node name can cause an access control problem. Do the following:

Step	Action
1	Check that the information in the namespace is correct (see your naming service documentation). Use the `cdi$trace` program on the destination system to obtain additional information (see *Section 6.10.1, "Monitoring Search Path Processing (OpenVMS Only)"*).

2	If a Phase IV system cannot connect to a DECnet-Plus system, and the DECnet-Plus system is using DECdns:
	
	a. Use the `decnet_register` tool to check that the backtranslation soft links exist.
	
	b. Check that the tower maintenance update is succeeding. Use the following NCL command:
	
	`ncl> show node node-id session control tower -`
	`_ncl> maintenance fullname all status`
	
	If the `last failure reason` status attribute shows no error, check that the namespace is being updated correctly (refer to your DECdns documentation).

3	Make sure that the correct protocol towers information exists for the Node module on the local system.
4	Check that the node name in the synonym directory is correct.

6.8. Correcting Insufficient Resource Problems

Do the following if you have insufficient Session Control resource problems on a local or remote node:

Step	Action
1	Determine if the remote node is a Phase IV system or DECnet-Plus system.
2	If the problem occurs on a Phase IV system, use NCP to examine the maximum links (or maximum alias links). Use the following command: `ncp> tell node-id show executor characteristics`

Step	Action
	If the problem occurs on a DECnet-Plus system, use NCL to look at the Session Control ports. Use the following command: `ncl> show session control port * all`
3	Look at links or ports currently in use on the remote system. You can increase the links if necessary. Look at the link activity and the operation of the application to determine if you need more links or ports. Otherwise, examine the application operation to ensure it is configured properly.

6.9. Correcting Timed Out Problems

If you receive occasional timed-out errors, it is possible that Session Control had to take extra time to locate a specified node address. In this case, retry the failed operation. If you receive frequent timed-out errors, do the following:

Step	Action
1	If making a connection to an OpenVMS system, see if the complete `login.com` file is executed. If the remote system executes the complete `login.com` file when it receives a connect request, edit the file so only the necessary command lines execute. If the `login.com` file is not causing a problem, go to step 2.
2	Look at the incoming and outgoing request timer values. Use the following NCL command: `ncl> show session control all characteristics`
3	If the timer values seem too low, reset the values. Use NCL commands similar to the following: `ncl> set session control incoming timer` *`seconds`*

6.10. Correcting Node Name Resolution Problems

This section describes how to monitor DECnet-Plus node name and address resolution and search path processing.

During DECnet-Plus configuration, the system administrator sets up one or more name services on each node. This setup procedure includes generation of an NCL startup script that contains the name service search path information for the node.

The name service search path describes the following information:

- The order in which the name services are to be searched for node name and address information
- One or more *naming templates* for each name service to determine how DECnet-Plus should interpret abbreviated node names entered by users

For more information on name service configuration and search paths, refer to your DECnet-Plus installation and configuration guides.

For more information on DECdns, refer to *VSI DECnet-Plus for OpenVMS DECdns Management Guide*.

6.10.1. Monitoring Search Path Processing (OpenVMS Only)

You can use either the Common Trace Facility or the `cdi$trace` program to obtain naming trace information.

Use the following command to invoke the Common Trace Facility:

```
$ Trace Start "SESSION CDI *"
```

Including the `CDI` parameter restricts trace facility output to node name and address resolution messages.

Use the following command to run `cdi$trace`, a program located in SYS$SYSTEM. For example:

```
$ run sys$system:cdi$trace
```

You can use the following procedure to redirect `cdi$trace` output to a file:

1. Define a DCL foreign command symbol:

   ```
   $ cdi$trace == "$cdi$trace"
   ```

2. Specify the name of the file to contain the `cdi$trace` output:

   ```
   $ cdi$trace trace.log
   ```

   The output file may occasionally be missing the last few records of the trace. This is a known problem.

Although `cdi$trace` has known problems when run during a LAT terminal session (on an LT device), a workaround is to issue the DCL `spawn` command first.

6.10.2. Tracing Node Name Resolution Problems (UNIX Only)

You can trace DECnet-Plus node name and address resolution and search path processing on UNIX systems by setting the environment variable CDITRACE to a non-zero number before using DECnet-Plus applications. For example, `> setenv CDITRACE 2`

6.10.3. Displaying Search Path Information

Do the following to display the forward translation (node name to address) and backtranslation (address to node name) search paths for a system:

To:	Use This Tool or Command:
Display the forward translation search path.	`ncl> show session control naming -` `_ncl> search path`

Display the backtranslation search path.	`ncl> show session control`
	` backtranslation -`
	`_ncl> search path`

6.10.4. Identifying Namespace Consistency Problems

Using the `decnet_register` tool, you can verify that the reverse address mapping links and the synonym links for a node are set up properly in a name service.

The following `decnet_register` command reads the information for a node from a name service, checks the information for consistency, and prints messages describing any inconsistencies:

```
decnet_register> show node node-id full
```

6.11. Examining the DECnet-Plus Naming Cache (OpenVMS Only)

DECnet-Plus uses an in-memory naming cache to improve performance of name and address resolution for all supported name services. This naming cache supersedes the existing DECdns cache for storage of name and addressing information.

DECnet-Plus uses this naming cache rather than the DECdns cache, for name and address resolution requests for all three name services: DECdns, Local, and DNS/BIND.

The DECdns cache still exists and DECnet-Plus continues to use it to resolve the special namespace *nicknames:*, `local:`, and `domain:`. The prefixes `local:` and `domain:` on a node full name, indicate to DECnet-Plus the name service where the name and addressing information is stored.

Note that the DECdns cache continues to exist. Applications other than DECnet-Plus (for example, DFS) that use DECdns directly will continue to use the existing DECdns cache.

6.11.1. Managing the Naming Cache

Using NCL commands, you can manage two naming cache parameters, the checkpoint interval and the timeout period, and flush entries from the in-memory naming cache.

Refer to your network management guide for information on managing the in-memory naming cache.

6.11.2. Dumping the Naming Cache

Use the following procedure to dump the contents of the naming cache:

1. Checkpoint the cache to disk. One way to force a checkpoint is by setting the checkpoint interval. For example:

   ```
   $ MCR NCL Set Session Control Naming Cache Checkpoint Interval 8:0:0
   ```

   For improved performance, CDI checkpointing is deferred for up to 15 minutes after a checkpoint request. Wait to examine the file until the checkpoint actually occurs. If you monitor the CDI activity with `cdi$trace`, you will see the checkpoint occur.

2. Dump the on-disk checkpoint file by running `cdi_cache_dump`, a program located in SYS $SYSTEM.

   For example:

   ```
   $ run sys$system:cdi_cache_dump
   ```

Refer to your network management guide for information on managing the in-memory naming cache.

Chapter 7. Solving Transport Problems

If you determine that an application failure is neither an application-specific, Session Control, or naming service problem, the next area to examine is the Transport layer. For the DECnet-Plus product, this means a problem could exist with either the OSI transport or Network Service Protocol (NSP) software.

Topics In This Chapter

The topics in this chapter are:

- Underlying Components (OpenVMS Only) (*Section 7.1, "Underlying Components (OpenVMS Only)"*)
- Underlying Components (UNIX Only) (*Section 7.2, "Underlying Components (UNIX Only)"*)
- Symptoms of Transport Problems (*Section 7.3, "Symptoms of Transport Problems"*)
- Isolating Transport Layer Problems (*Section 7.4, "Isolating Transport Layer Problems"*)
- Correcting Connection Problems (*Section 7.5, "Correcting Connection Problems"*)
- Correcting OSI Transport Over CLNS Connection Problems (*Section 7.6, "Correcting OSI Transport Over CLNS Connection Problems"*)
- Correcting OSI Transport Over CONS (X.25) Connection Problems (*Section 7.7, "Correcting OSI Transport Over CONS (X.25) Connection Problems"*)
- Troubleshooting RFC 1006 (*Section 7.8, "Troubleshooting RFC 1006"*)

7.1. Underlying Components (OpenVMS Only)

Figure 7.1, "Underlying Components (OpenVMS)" shows the direct underlying components that the NSP and OSI transport components use on OpenVMS systems. Use this information as a guide when isolating transport problems.

Figure 7.1. Underlying Components (OpenVMS)

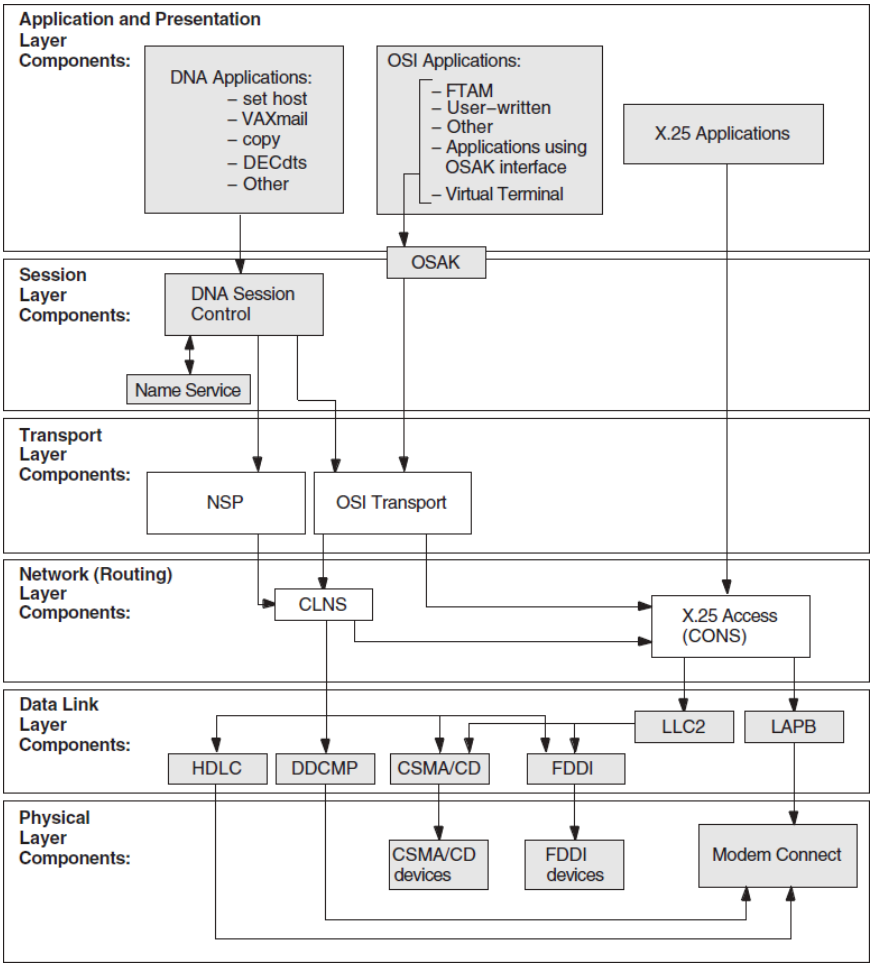

7.2. Underlying Components (UNIX Only)

Figure 7.2, "Underlying Components (UNIX)" shows the direct underlying components that the NSP and OSI transport components use on DECnet-Plus systems. Use this information as a guide when isolating transport problems.

Figure 7.2. Underlying Components (UNIX)

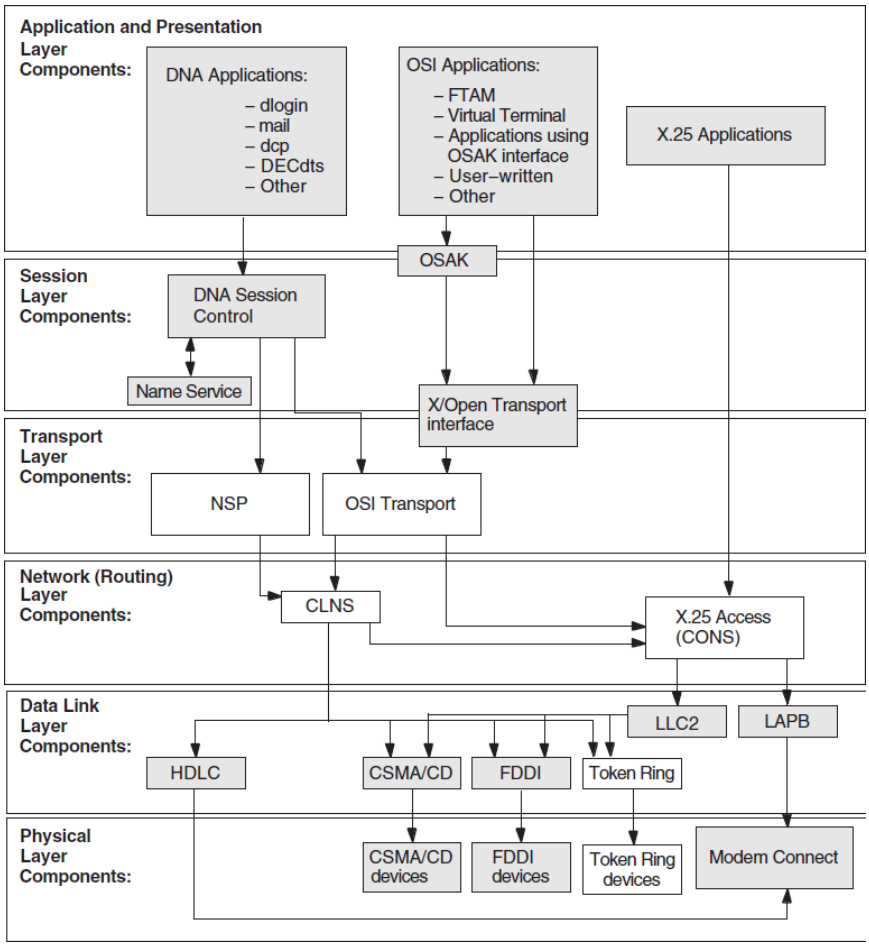

7.3. Symptoms of Transport Problems

If attempts to connect to a remote node fail or time out and you cannot find any problems in the upper layers, it is possible that a Transport layer problem is the cause of the failure.

7.4. Isolating Transport Layer Problems

If you cannot isolate an application failure at the Session Control layer, the problem could be at the Transport layer. Or, the problem could exist at the Network layer, but examining the Transport layer provides you with information that will help you isolate the problem in the Network layer.

7.4.1. Tools to Use

Use the following tools to isolate Transport layer problems:

Tool	And Refer To:
NCL commands for the NSP and OSI transport modules	NCL reference documentation
`dts/dtr` tests, with `/transport` qualifier (DECnet-Plus)	*Chapter 3, "Testing Network Reachability"*
Common Trace Facility	*DECnet-Plus Common Trace Facility (CTF) Use*

7.4.2. Fault-Isolation Methodology

Use *Figure 7.3, "Fault-Isolation Methodology (Transport)"* as a guideline for isolating Transport layer problems.

Figure 7.3. Fault-Isolation Methodology (Transport)

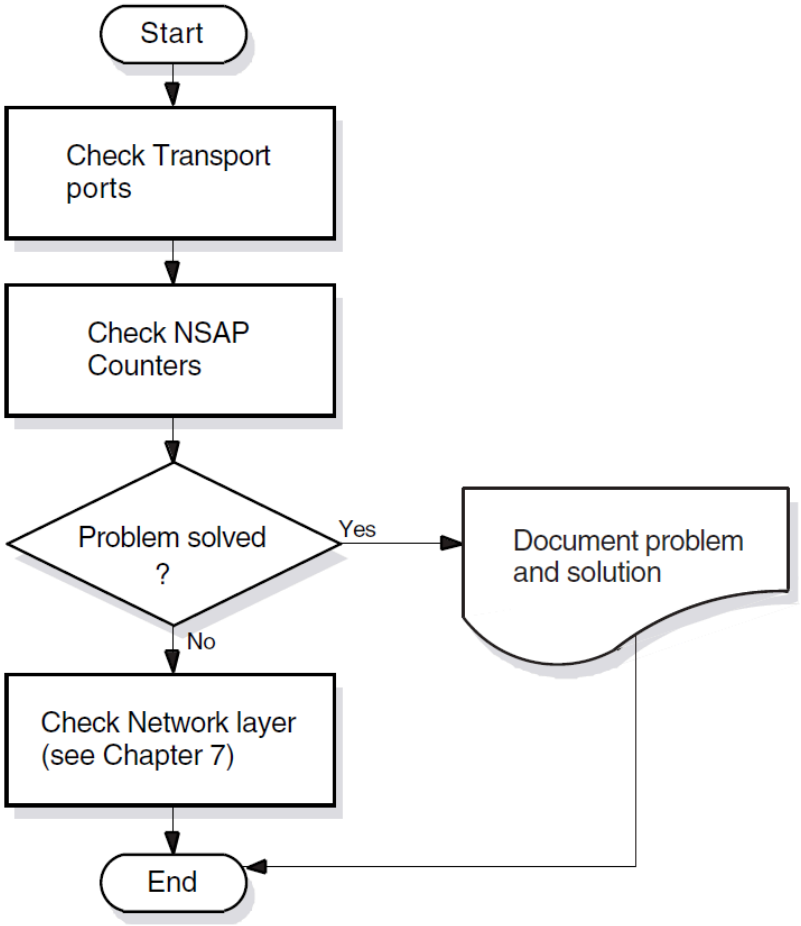

7.5. Correcting Connection Problems

If it is unclear where transport connection problems are occurring, look at the related ports and NSAP counters. You can also use the Common Trace Facility.

7.5.1. Checking Ports

If you check OSI transport and NSP ports, you can see whether logical links between systems are being established. Do the following to check the ports:

Step	Action

1	Disable the Transport layer software that you are not checking. Use one of the following NCL commands:
	
	`ncl> disable OSI transport`
	`ncl> disable NSP`

Step	Action
	If you disable either transport software, any connections that are currently using it are disconnected. The user can reconnect to the remote system (which then uses the other transport) if it supports the other transport and there are no other transport problems.
2	Initiate a connection to the target system.

3	Use the following NCL command to identify the transport port information for the Session Control ports in which you are interested (depending on which end of the connection you are checking, you specify direction as incoming or outgoing):
	
	`ncl> show session control port * all status, with -`
	`_ncl> direction=value`

4	Display the information for the appropriate Transport layer port with one of the following NCL commands:
	
	`ncl> show NSP port port-id all attributes`
	`ncl> show OSI transport port port-id all attributes`

5	Check that the local NSAP and remote NSAP information used in the connection refers to the expected systems. Another cause of failure is incompatible NSAPs. A DECnet-Plus system needs a Phase-IV compatible address to allow communication between the DECnet-Plus system and a Phase IV system.
6	Examine counter information (such as user PDUs received or user PDUs sent) to determine if port is actively in use.
7	Reenable the transport software that you disabled. If you could not identify any connection problems, repeat this procedure with the transport software that you previously disabled.

7.5.2. Checking NSAP Counters

Do the following to get information about connections between two systems:

Step	Action

1	Determine the local NSAPs for the system you want to examine. Use one of the following NCL commands:
	
	`ncl>show nsp local nsap * name`
	`ncl>show osi transport local nsap *  name`
	
	Each transport can have up to three NSAPs.

2	Determine the remote NSAPs for the system you want to examine. You need to examine all combinations of local and remote NSAPs. Use one or both of the following NCL commands:
	
	`ncl> show nsp local nsap nsap-address -`
	`_ncl> remote nsap * name`
	`ncl> show osi transport local nsap nsap-address -`
	`_ncl> remote nsap * name`

3	Check the counters on the source system. Use one of the following NCL commands:

Step	Action	

	`ncl> show nsp local nsap` *`nsap-address`* `-`
	`_ncl> remote nsap` *`nsap-address`* `all attributes`
	
	`ncl> show osi transport local nsap` *`nsap-address`* `-`
	`_ncl> remote nsap` *`nsap-address`* `all attributes`	

4	Try to establish a connection to the target system. If you cannot connect to the target system, check the remote system or try to reach the remote system from a different node.	
5	Check the counters on the source system.	
	If:	**Then:**
	The Connects Sent counter increments, the source node initiated a connect request to the target node.	Do one or both of the following: ● Check the target node for incoming connections. See step 6 of this procedure. ● A network problem can exist. See *Chapter 8, "Solving Network Layer Problems"*.
	The Connects Sent counter does not increment, either a problem exists on the source system which prevents the system or application from attempting the connection, or a naming service problem exists.	Do one of the following: ● Check the application. ● Check naming service operation. See your naming service documentation.
6	If the source node is sending outgoing connect requests, check the counters on the target system.	
	If:	**Then:**
	The Connects Received counter increments but connection fails, there is a problem on the target node.	Examine the remote node to determine the problem.
	The Connects Received counter does not increment, a network problem may exist on either system that prevents the connections.	Do any of the following: ● Perform network reachability tests (see *Chapter 3, "Testing Network Reachability"*). ● Trace a path from the source node to the target node to determine if all systems in the expected path are available. ● Check the appropriate routing circuits and data links (see *Chapter 8, "Solving Network Layer Problems"*).
7	If you disabled transport entities, re-enable them, after checking the transport connection, with one of the following NCL commands: `ncl> enable nsp`	

Step	Action
	`ncl> enable osi transport`

7.6. Correcting OSI Transport Over CLNS Connection Problems

Do the following to correct transport problems if you are running OSI transport over CLNS connections:

Step	Action
1	Check the outgoing OSI connection. Use the following NCL command to identify the OSI transport template and network service (CONS or CLNS): `ncl> show osi transport template * all attributes`
2	Check to see if the source node is sending connect requests. Do the following: ● Use CTF to trace OSI transport for outgoing connect requests. ● Check the OSI transport local and remote NSAP counters before and after attempting the connection. If connect requests are not being sent, check the application or the Network layer of the source node. If connect requests are being sent, go to the next step in this procedure.
3	Check to see if the destination node is receiving incoming connect requests: ● Use CTF to trace OSI transport for incoming connect requests. ● Check OSI local and remote NSAP counters for connects received before and after the connect attempt. If incoming requests are not received, trace the network path between the source and destination node, and check the appropriate routing circuits or data links. If incoming requests are received, go to the next step in this procedure.
4	Check the remote node to determine if an application on the destination node is available to receive connect requests. a. For OSI applications such as FTAM or Virtual Terminal, refer to the application documentation to check that the application is defined correctly. b. For other applications, use the NCL command `show session control application` *`application-id`* `all`. For example, to verify the application definition for system operations on an OpenVMS system, enter the following command: `ncl> show session control application fal all`

Step	Action
	Check that the `node synonym` characteristic is set to true, the `image name` is `sys$system:fal.exe`, and the `address` is 17. If these values are incorrect, use NCL commands to correct them.

7.7. Correcting OSI Transport Over CONS (X.25) Connection Problems

Do the following to correct transport problems if you are running OSI transport over CONS connections:

Step	Action
1	Check that the source node is using a CONS template. Use the following NCL command: `ncl> show osi transport template * all attributes`

2	Check that the CONS template exists. Use the following NCL command:
	
	`ncl> show x25 access template` *`template_id`* `-`
	`_ncl> all characteristics`
	
	If the template does not exist, create the appropriate template (see your DECnet-Plus network management documentation).
	
	If the template does exist, go to the next step.

3	Check to see if the source node is sending connect requests. Do one of the following: ● Use CTF to trace OSI transport for outgoing connect requests. ● Look at the OSI transport local and remote NSAP counters before and after attempting the connection. If connect requests are not being sent, check the application or the network layer of the source node. See your X.25 documentation for information. If connect requests are being sent, go to the next step in this procedure.
4	Check to see if the destination node is receiving incoming connect requests: ● Use CTF to trace OSI transport for incoming connect requests. ● Look at the OSI transport local and remote NSAP counters for connects received before and after the connect attempt. If incoming requests are not received, trace the network path between the source and destination node and check the appropriate routing circuits or data links. If incoming requests are received, go to the next step in this procedure.
5	Determine if an application on the destination node is available to receive connect requests. Do the following:

Step	Action
	• For OSI applications such as FTAM or Virtual Terminal, refer to the application documentation to check that the application is defined correctly. • For other applications, use the NCL command `show session control application` *`application-id`* `all`. For example, to verify the application definition for system operations on a UNIX system, enter the following command: `ncl> show session control application fal all` Check that the `node synonym` characteristic is set to `true`, the `image name` is `usr/sbin/fal`, and the `address` is `number=17`. If these values are incorrect, use NCL commands to correct them.

7.8. Troubleshooting RFC 1006

Some general techniques for RFC 1006 troubleshooting include:

- Run the `rfc1006d` daemon in `-debug` mode to obtain printed information messages about the daemon's activities.
- Use the example programs to help you isolate the application behavior that is causing the problem. Use them to test RFC 1006 connectivity with a remote node or the local node.
- During RFC 1006 application debugging, use the example programs as a way to test your assumptions about the behavior of XTI for RFC 1006 and to supplement the documentation.

RFC 1006 is layered on TCP/IP. Refer to your TCP/IP operational information for details.

7.8.1. Common Problems

While troubleshooting, you may encounter these problems:

- **`rfc1006d` appears to exit as soon as you run it**

  Note that `rfc1006d` obeys standard UNIX daemon conventions;therefore, you will see a shell prompt immediately after running the program, even if `rfc1006d` is still running, because `rfc1006d` will run itself as a background process even if not explicitly directed to do so.

  To see if it is still running, use this command:

  ```
  # ps -aef | grep rfc1006d
  ```

  If you start an `rfc1006d` process while another `rfc1006d` is already running, an error message will be written into the `syslog` file. The number in square brackets is the process ID. The following is an example of such an error message:

  ```
  Jul 20 16:25:12 itsdoa rfc1006d[408]: t_bind: errno=Address already in
   use,
  t_errno=System error
  ```

- **`rfc1006d` is not running**

Under normal conditions, `rfc1006d` is started up at system boot time by a shell script named `/sbin/rc3.d/S28.70rfc1006`. Make sure that script is present. Run it and see whether `rfc1006d` stays running. Check the system log file for error messages from `rfc1006d`. (Check both `daemon.log` and `kern.log`.)

- **Client cannot connect to server**

  Determine if the remote node can be reached by any TCP application. If it cannot, use TCP/IP network troubleshooting techniques.

  If the remote node can be reached by a TCP application, make sure that the remote RFC 1006 has a daemon running and listening to the TCP port to which the local node is connected. This port should be port 102 under normal conditions.

  Next, make sure that the server application is running and listening for the TSAP-ID in the client's destination RFC 1006 address.

- **Client gets `TSYSERR` value in `t_errno` variable and `ENETDOWN` in `errno` variable**

  This error is returned by the kernel to the RFC 1006 application whenever the `rfc1006d` daemon dies or is not running. Verify that the `rfc1006d` daemon is running. The `TSYERR` and `ENETDOWN` symbols are defined in the `<xti.h>` and `<errno.h>` include files respectively.

- **Connections hang**

  See if the RFC 1006 kernel is having trouble getting buffer space. You can do this with the command:

  ```
  # dbx -k /vmunixdbx) p r1006_allocb_failures0dbx)
  ```

  This value is normally zero. If it is not zero, either a large number of concurrent RFC 1006 sessions or competition with other streams applications for kernel streams buffer space could be the problem.

- **XTI RFC 1006 application gets `TSYSERR` value in `t_errno` variable and `EPROTO` value in `errno` variable**

  This means that a protocol error was detected by RFC 1006. A protocol error is an unexpected behavior by either the network or the remote application. An error message containing information about the protocol error should have been logged in the system log file. Forward this information to VSI, along with a method of reproducing the problem or a precise description of what was going on when the problem happened. The `TSYERR` and `EPROTO` errors are defined in the `<xti.h>` and `<errno.h>` include files respectively.

Chapter 8. Solving Network Layer Problems

This chapter describes how to use routing circuit and data link information to isolate and correct simple DECnet-Plus network layer problems.

Topics In This Chapter

The topics in this chapter are:

- Underlying Entities (OpenVMS Only) (*Section 8.1, "Underlying Entities (OpenVMS Only)"*)
- Underlying Entities (UNIX Only) (*Section 8.2, "Underlying Entities (UNIX Only)"*)
- Symptoms of Network Layer Problems (*Section 8.3, "Symptoms of Network Layer Problems"*)
- Isolating Network Layer Problems (*Section 8.4, "Isolating Network Layer Problems"*)
- Finding Underlying Entities (*Section 8.5, "Finding Underlying Entities"*)
- Correcting Configuration Problems (*Section 8.6, "Correcting Configuration Problems"*)
- Correcting Connectivity Problems (*Section 8.7, "Correcting Connectivity Problems"*)

8.1. Underlying Entities (OpenVMS Only)

To isolate problems at the Network layer, you need to be able to identify the data link entities that the Routing layer uses and the physical entities associated with the data link entities.

Figure 8.1, "Underlying Entities (OpenVMS)" illustrates the users of the data links that you find in a DECnet-Plus for OpenVMS system.

Figure 8.1. Underlying Entities (OpenVMS)

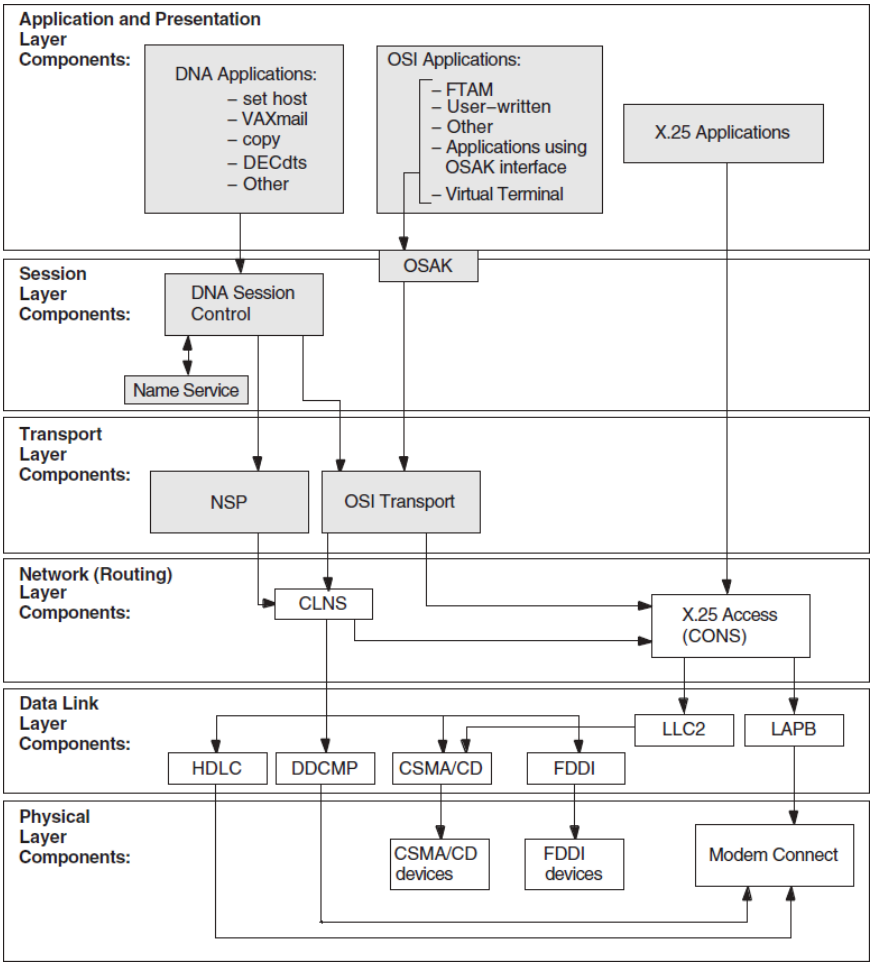

8.2. Underlying Entities (UNIX Only)

To isolate problems at the Network layer, you need to be able to identify the data link entities that the Routing layer uses and the physical entities associated with the data link entities.

Figure 8.2, "Underlying Entities (UNIX)" illustrates the users of the data links that you find in a DECnet-Plus for UNIX system.

Figure 8.2. Underlying Entities (UNIX)

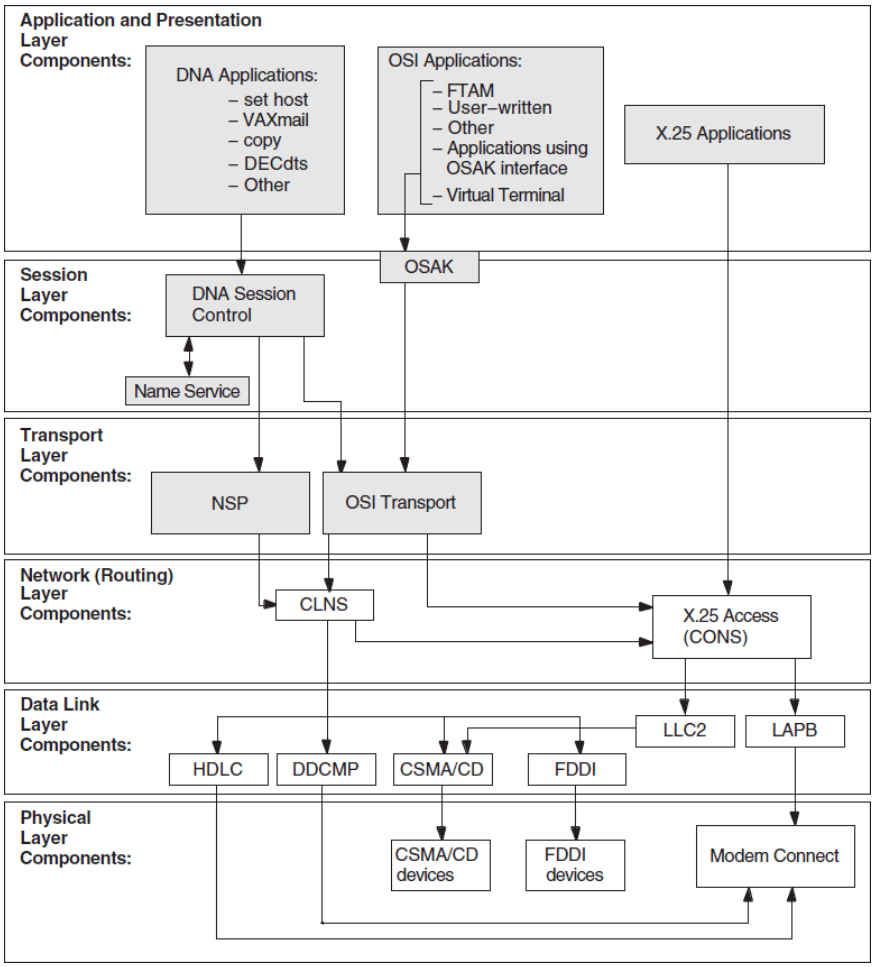

8.3. Symptoms of Network Layer Problems

The symptoms in *Table 8.1, "Symptoms of Network Layer Problems"* indicate that a routing-circuit or data link problem exists.

Table 8.1. Symptoms of Network Layer Problems

Symptom	Possible Problem	See
Entities were not available when tracing a path between a routing circuit and the physical device. One or more of the entities had a State characteristic set to `off`. An error appeared when you tried to enable an entity.	Configuration	*Section 8.6, "Correcting Configuration Problems"*
An application failed but no errors were found in the upper layers	Configuration or connectivity	Section *Section 8.6, "Correcting Configuration Problems"* or *Section 8.7, "Correcting Connectivity Problems"*

Symptom	Possible Problem	See
The configuration is correct but the routing circuit does not work	Connectivity	*Section 8.7, "Correcting Connectivity Problems"*

8.4. Isolating Network Layer Problems

If you think you have a Network layer problem, first check the physical connections between systems before you examine routing circuits and their underlying entities.

8.4.1. Tools to Use

Use NCL commands to check routing circuits in the Network layer.

8.4.2. Fault-Isolation Methodology

Use *Figure 8.3, "Fault-Isolation Methodology (Circuit Connectivity)"* as a guideline when you isolate circuit connectivity and configuration faults. The following sections in this chapter describe related correction procedures.

Figure 8.3. Fault-Isolation Methodology (Circuit Connectivity)

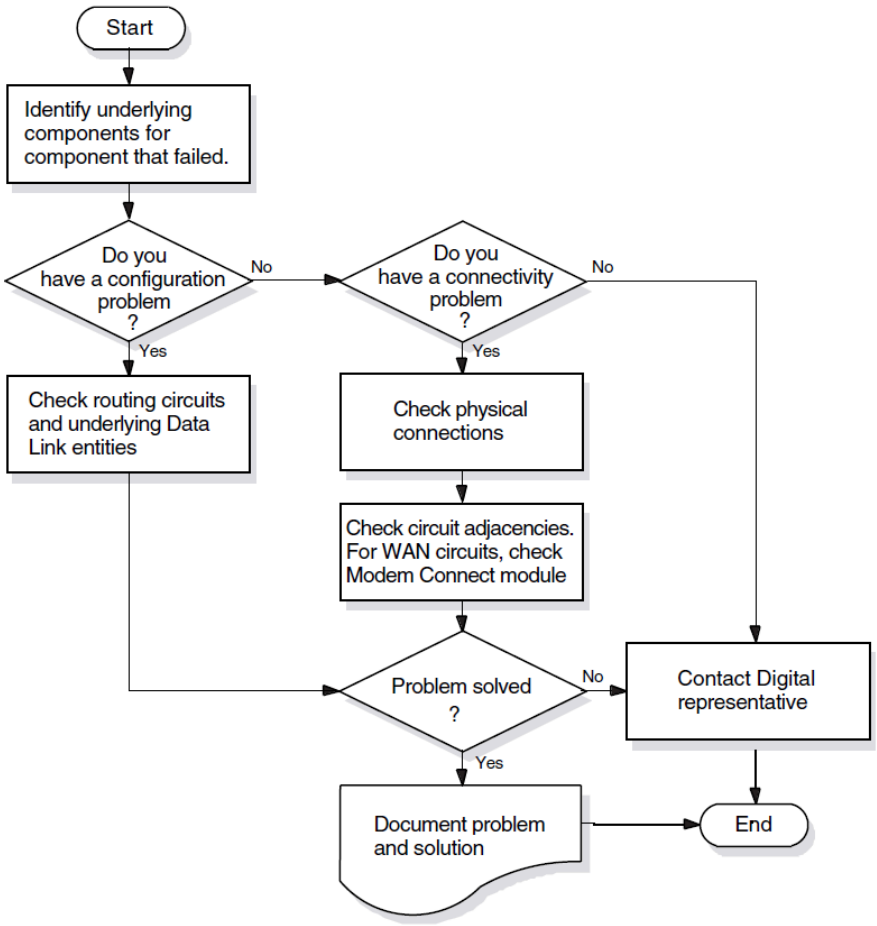

8.5. Finding Underlying Entities

To isolate routing circuits and data link problems in the Network layer, you need to be able to identify the underlying entities for specific routing circuits.

For each routing circuit type, there is a corresponding data link entity displayed with the set of circuit characteristics. The X.25 Protocol module provides information about the associated data link entities for X.25 circuits. Refer to your NCL and X.25 documentation for more details about X.25 circuits.

8.5.1. Finding the Underlying Entities for HDLC Circuits

If you know the routing circuit ID, you can identify the associated underlying entities, including the physical device entity by doing the following:

Step	Action
1	Set the NCL default entity to the node whose circuits you want to check. If you cannot reach a remote node over the network, log into that system directly to check the circuits.

2	Find the data link entity for the routing circuit that you want to check. Use the following NCL command:
	`ncl> show routing circuit circuit-id -`
	`_ncl> data link entity`

3	Examine the physical line characteristic of the data link entity module. Use the following NCL command: `ncl> show hdlc link link-name logical station`

4	Examine the physical device entity to identify the communications device. Use the following NCL command:
	`ncl> show modem connect line line-id -`
	`_ncl> communications port`

8.5.2. Finding the HDLC Circuits for a Physical Device

If you know the physical device entity, you can identify the associated routing circuit by doing the following:

Step	Action
1	Find the Modem Connect entity connected to the physical device. Use the following NCL command: `ncl> show modem connect line * comm port`
2	Examine the Modem Connect data port entity for the communications port. Use the following NCL command: `ncl> show modem connect data port * all status`
3	Examine the HDLC port entity's attributes for one that contains the same client as displayed in the previous step. The client characteristic indicates the routing circuit. Use the following NCL command:

Step	Action
	`ncl> show HLDC port * all status`

8.5.3. Finding the Underlying Entities for DDCMP Circuits (OpenVMS Only)

If you know the routing circuit ID, you can identify the associated underlying entities, including the physical device entity by doing the following:

Step	Action
1	Set the NCL default entity to the node whose circuits you want to check. If you cannot reach a remote node over the network, log into that system directly to check the circuits.

2	Find the data link entity for the routing circuit that you want to check. Use the following NCL command:
	
	`ncl> show routing circuit circuit-id -`
	`_ncl> data link entity`

3	Examine the physical line characteristic of the data link entity module. Use the following NCL command: `ncl> show ddcmp link link-name physical line`
4	Examine the physical device entity to identify the communications device. Use the following NCL command: `ncl> show modem connect line line-id comm port`

8.5.4. Finding the DDCMP Circuits for a Physical Device (OpenVMS Only)

If you know the physical device entity, you can identify the associated routing circuit by doing the following

Step	Action
1	Find the Modem Connect entity connected to the physical device. Use the following NCL command: `ncl> show modem connect line * comm port`
2	Examine the Modem Connect entity for the communications port. Use the following NCL command: `ncl> show modem connect data port * all status`
3	Examine the DDCMP port entity's attributes for the client characteristic. The client characteristic indicates the routing circuit. Use the following NCL command: `ncl> show DDCMP port * all status`

8.5.5. Finding the Underlying Entities for CSMA-CD Circuits

If you know the routing circuit ID, you can identify the associated underlying entities, including the physical device entity by doing the following:

Step	Action
1	Set the NCL default entity to the node whose circuits you want to check. If you cannot reach a remote node over the network, you need to log into that system directly to check the circuits.

2	Find the data link entity. Use the following NCL command:
	
	`ncl> show routing circuit circuit-id -`
	`_ncl> data link entity`

3	Examine the communication port characteristic of the data link entity to identify the communications port. Use the following NCL command: `ncl> show csma-cd station station-id comm port`

8.5.6. Finding the CSMA-CD Circuit for a Physical Device

If you know the physical device entity, you can identify the associated routing circuit by doing the following:

Step	Action
1	Find the CSMA-CD station entity connected to the physical device. Use the following NCL command: `ncl> show csma-cd station * comm port`
2	Examine the CSMA-CD port entity's attributes to find the routing circuit. Use the following NCL command: `ncl> show csma-cd port * client,station`

8.5.7. Finding the Underlying Entities for FDDI Circuits

If you know the routing circuit ID, you can identify the associated underlying entities, including the physical device entity by doing the following:

Step	Action
1	Set the NCL default entity to the node whose circuits you want to check. If you cannot reach a remote node over the network, log into that system directly to check the circuits.

2	Find the data link entity for the routing circuit that you want to check. Use the following NCL command:
	
	`ncl> show routing circuit circuit-id -`
	`_ncl> data link entity`

Step	Action

3	Examine the physical port characteristic of the data link entity to identify the physical port. Use the following NCL command:
	
	`ncl> show fddi station station-id -`
	`_ncl> communication port`

8.5.8. Finding the FDDI Circuit for a Physical Device

If you know the physical device entity, you can identify the associated routing circuit by doing the following:

Step	Action

1	Find the FDDI station entity connected to the physical device. Use the following NCL command:
	
	`ncl> show fddi station * -`
	`_ncl> communication port`

2	Examine the FDDI port entity's attributes to find the routing circuit. Use the following NCL command: `ncl> show fddi port * client`

8.5.9. Finding the Underlying Entities for Token Ring Circuits (UNIX Only)

If you know the routing circuit ID, you can identify the associated underlying entities, including the physical device entity by doing the following:

Step	Action
1	Set the NCL default entity to the node whose circuits you want to check. If you cannot reach a remote node over the network, log into that system directly to check the circuits.

2	Find the data link entity for the routing circuit that you want to check. Use the following NCL command:
	
	`ncl> show routing circuit circuit-id -`
	`_ncl> data link entity`

3	Examine the physical port characteristic of the data link entity to identify the physical port. Use the following NCL command:
	
	`ncl> show token ring station station-id -`
	`_ncl> communication port`

8.5.10. Finding the Token Ring Circuit for a Physical Device (UNIX Only)

If you know the physical device entity, you can identify the associated routing circuit by doing the following:

Step	Action
1	Find the Token Ring station entity connected to the physical device. Use the following NCL command: `ncl> show token ring station * communication port`
2	Examine the Token Ring port entity's attributes to find the routing circuit. Use the following NCL command: `ncl> show token ring port * client, station`

8.6. Correcting Configuration Problems

If you suspect there is a routing circuit configuration problem, check the routing circuit's state. If `state=off`, use the NCL command `enable` to set the state to `on`.

If:	Then Do This:
Error appears	Check the characteristics of the data link entity associated with the routing circuit.
No error appears	Check that the routing circuit state remains `on`. For HDLC circuits, if the state does not remain `on`, the system should generate an event indicating why.

8.6.1. Correcting DDCMP (OpenVMS Only) and HDLC Data Link Configuration Problems

Do the following to correct problems with DDCMP or HDLC data links (only OpenVMS on Alpha systems support DDCMP entities):

1. Check the state of the appropriate link and logical station entities. Use the NCL commands similar to the following (use `ddcmp` instead of `hdlc` only when checking DDCMP entities for OpenVMS):

   `ncl> show hdlc link` *`link-id`* `state`

   `ncl> show hdlc link` *`link-id`* `logical station` *`station-id`*

2. If the `state=off`, use the enable command to change the `state` to `on`.

If:	Then Do This:
Error appears	Check the characteristics of the entity indicated in the error message.
No error appears	Check that the state remains `on`. For HDLC circuits, if state does not remain `on`, check the Modem Connect module.

3. If the `state=on`, check and record the value of the `protocol state` attribute of the local station entity.

If Attribute Value Is:	Then:
Running	All devices and entities appear to be operating properly.

If Attribute Value Is:	Then:
Starting or Initializing	The data link is attempting to connect with the remote system. If the link remains in this state for a significant amount of time, it could be that the data being transmitted is not received by the remote node. This indicates you have a connectivity problem.
Halted or Inoperative	One of the related entities is disabled. Check the states of the related entities.
Error	The threshold number of attempts to synchronize the link was reached. Check the counters for the logical station entity.

8.6.2. Correcting CSMA-CD Data Link Configuration Problems

Do the following to correct CSMA-CD data link configuration problems:

Step	Action
1	Check that the `CSMA-CD station` exists. Use the following NCL command: `ncl> show csma-cd station` *`station-id`* `state`
2	If the device does not exist, issue the appropriate command to create the device (see your installation documentation). If an error appears when you try to create the device, check the entity specified in the message.
3	If the device does exist, check the entity's state. If the state is `off`, enable the device. If the state is `on`, and the data link still does not operate correctly, the cause is most likely a connectivity problem.

8.7. Correcting Connectivity Problems

If your configuration seems correct but the routing circuit does notwork, it is possible that a connectivity problem is the cause of the failure. Do the following:

Step	Action
1	Check the physical connections. For example: ● Check that all cables are connected correctly. ● If using a modem, check the indicators to see if they provide any indication of a problem.
2	For WAN links (HDLC), check the Modem Connect status to see if the modem control leads are asserted correctly.
3	Determine if data is being sent and received. You can:

Step	Action
	● Check entity Transmit and Receive counters to see if they are incrementing. ● If there appear to be no data flows, use loopback tests to see how far data can be transmitted and received.
4	Look to see if circuit adjacencies exist. Use the following NCL command: `ncl> show circuit circuit-id * adjacency * all`

Appendix A. Using the OSAKtrace Utility

The OSAKtrace utility captures a record of what happens during an OSI information exchange. The OSAKtrace utility is not an implementation of any OSI standard; there is no ISO standard for OSI tracing.

You can use OSAKtrace to show that application programs that use the OSAK routines conform with the standards, and to identify any problems that may arise when one OSI application works with another over a network.

Information on using the OSAKtrace utility appears in *OSAK Programming*, and descriptions of the trace emitter calls appear in *OSAK Programming Reference*.

Appendix B. DECnet-Plus Application Tracing Examples

This appendix contains an example of a trace output for the FTAM and Virtual Terminal software.

The trace output for FTAM and Virtual Terminal operations on UNIX and OpenVMS is very similar; this appendix shows the trace output as it appears on a UNIX system.

B.1. DECnet-Plus Application Trace Example

This section provides an example of the default output of the `ositrace` utility. This example traces the result of the FTAM `omv` command on a UNIX system.

B.1.1. Association Establishment — Initiator

The initiator requests a session connection.

```
10:11:57.08     OSI trace started Wed Jan 30 10:11:57 1994
10:11:58.20 -> Session
   0dff0148 05061301 00160102 14020002 33028080 34020103 c1ff0130 3180a080
   80010100 00a28081 02808082 020103a4 80308002 01010605 28c27b02 01308006
   02510100 00000030 80020103 060528c2 7b020230 80060251 01000000 00308002
   01050605 28c27b02 03308006 02510100 00000030 80020107 060528c2 7b020430
   80060251 01000000 00308002 01090606 2bce0f01 02023080 06025101 00000000
   30800201 0b060452 01000130 80060251 01000000 00000088 02060089 03054000
   61803080 02010ba0 7b6080a1 80060528 c27b0101 0000a280 06052bce 0f070100
   00a38002 01010000 be802880 020101a0 4da08082 01008302 03408403 05070085
   02058086 0100a780 4e0528c2 7b05014e 0528c27b 05024e05 28c27b05 034e062b
   ce0f0105 09000056 0776696e 63656e74 710a1908 6e69636b 73746572 00000000
   00000000 00000000 00000000

   connect-spdu                                                    0d ff 01
       connect/accept-item                                         05 06
           protocol-options  = NULL                                13 01
           version-number  = 2                                     16 01 02
       session-user-requirements  = '0000000000000010'B            14 02 00
         ( duplex functional unit )
       calling-ssap-identifier  =                                  33 02 80
       called-ssap-identifier  =                                   34 02 01
       user-data                                                   c1 ff 01
```

Presentation Connection — Initiator

The initiator requests a presentation connection. The negotiation of abstract syntaxes takes place during this time.

```
10:11:58.20 -> Presentation
   3180a080 80010100 00a28081 02808082 020103a4 80308002 01010605 28c27b02
   01308006 02510100 00000030 80020103 060528c2 7b020230 80060251 01000000
   00308002 01050605 28c27b02 03308006 02510100 00000030 80020107 060528c2
   7b020430 80060251 01000000 00308002 01090606 2bce0f01 02023080 06025101
   00000000 30800201 0b060452 01000130 80060251 01000000 00000088 02060089
   03054000 61803080 02010ba0 7b6080a1 80060528 c27b0101 0000a280 06052bce
   0f070100 00a38002 01010000 be802880 020101a0 4da08082 01008302 03408403
```

```
05070085 02058086 0100a780 4e0528c2 7b05014e 0528c27b 05024e05 28c27b05
034e062b ce0f0105 09000056 0776696e 63656e74 710a1908 6e69636b 73746572
00000000 00000000 00000000 00000000
CP PPDU SET =                                                   31 80
{
  [0] IMPLICIT SET =                                            a0 80
  {
    [0] IMPLICIT mode-selector INTEGER = normal-mode            80 01 01
  }
  [2] IMPLICIT SEQUENCE =                                       a2 80
  {
    [1] IMPLICIT calling-presentation-selector OCTET STRING =   81 02
      '8080'H
    [2] IMPLICIT called-presentation-selector OCTET STRING =    82 02
      '0103'H
    [4] IMPLICIT presentation-context-definition-list           a4 80
      SEQUENCE =
    {
      SEQUENCE =                                                30 80
      {
        presentation-context-identifier INTEGER = 1             02 01 01
        abstract-syntax-name OBJECT IDENTIFIER =                06 05 28
          {1 0 8571 2 1}
        SEQUENCE =                                              30 80
        {
          transfer-syntax-name OBJECT IDENTIFIER = {2 1 1}      06 02 51
        }
      }
      SEQUENCE =                                                30 80
      {
        presentation-context-identifier INTEGER = 3             02 01 03
        abstract-syntax-name OBJECT IDENTIFIER =                06 05 28
          {1 0 8571 2 2}
        SEQUENCE =                                              30 80
        {
          transfer-syntax-name OBJECT IDENTIFIER = {2 1 1}      06 02 51
        }
      }
        SEQUENCE =                                              30 80
        {
          presentation-context-identifier INTEGER = 5           02 01 05
          abstract-syntax-name OBJECT IDENTIFIER =              06 05 28
            {1 0 8571 2 3}
        SEQUENCE =                                              30 80
        {
          transfer-syntax-name OBJECT IDENTIFIER = {2 1 1}      06 02 51
        }
      }
      SEQUENCE =                                                30 80
      {
        presentation-context-identifier INTEGER = 7             02 01 07
        abstract-syntax-name OBJECT IDENTIFIER =                06 05 28
          {1 0 8571 2 4}
        SEQUENCE =                                              30 80
        {
          transfer-syntax-name OBJECT IDENTIFIER = {2 1 1}      06 02 51
        }
      }
```

```
        SEQUENCE =                                              30 80
        {
          presentation-context-identifier INTEGER = 9           02 01 09
          abstract-syntax-name OBJECT IDENTIFIER =              06 06 2b
            {1 3 9999 1 2 2}
          SEQUENCE =                                            30 80
          {
            transfer-syntax-name OBJECT IDENTIFIER = {2 1 1}    06 02 51
          }
        }
        SEQUENCE =                                              30 80
        {
          presentation-context-identifier INTEGER = 11          02 01 0b
          abstract-syntax-name OBJECT IDENTIFIER = {2 2 1 0 1}  06 04 52
          SEQUENCE =                                            30 80
          {
            transfer-syntax-name OBJECT IDENTIFIER = {2 1 1}    06 02 51
          }
        }
      }
      [8] IMPLICIT presentation-requirements BIT STRING = '00'B   88 02 06
        ( )
      [9] IMPLICIT user-session-requirements BIT STRING =         89 03 05
        '01000000000'B
        ( duplex )
      [APPLICATION 1] IMPLICIT fully-encoded-data SEQUENCE =      61 80
      {
        PDV-list SEQUENCE =                                     30 80
        {
          presentation-context-identifier INTEGER = 11          02 01 0b
          single-asn1-type [0] ANY =                            a0 7b

          - Abstract Syntax Name
          -   ACSE-PCI
          - Presentation Context Identifier
          -   11
```

ACSE Association Request — Initiator

The initiator requests an ACSE association. The application context is set at this time.

```
10:11:58.20 -> ACSE
   6080a180 060528c2 7b010100 00a28006 052bce0f 07010000 a3800201 010000be
   80288002 0101a04d a0808201 00830203 40840305 07008502 05808601 00a7804e
   0528c27b 05014e05 28c27b05 024e0528 c27b0503 4e062bce 0f010509 00005607
   76696e63 656e7471 0a19086e 69636b73 74657200 00000000 00000000 00000000
   000000
          [APPLICATION 0] IMPLICIT aarq SEQUENCE =              60 80
          {
            application-context-name [1]                        a1 80 06
              application-context-name OBJECT IDENTIFIER =
              {1 0 8571 1 1}
            called-ap-title [2] ap-title OBJECT IDENTIFIER =    a2 80 06
              {1 3 9999 7 1}
            called-ae-qualifier [3] ae-qualifier INTEGER = 1    a3 80 02
            [30] IMPLICIT user-information SEQUENCE =           be 80
            {
              IMPLICIT EXTERNAL SEQUENCE =                      28 80
```

```
              {
                indirect-reference INTEGER = 1                    02 01 01
                single-asn1-type [0] ANY =                        a0 4d

                - Abstract Syntax Name
                -   FTAM-PCI
                - Presentation Context Identifier
                -   1
```

FTAM Initialization Request — Initiator

The initiator requests an FTAM initialization to establish the FTAM regime. The negotiating of service class and functional unit, the listing of supported document types, and the passing of the initiator ID and password occur at this time.

```
10:11:58.20 -> FTAM
   a0808201 00830203 40840305 07008502 05808601 00a7804e 0528c27b 05014e05
   28c27b05 024e0528 c27b0503 4e062bce 0f010509 00005607 76696e63 656e7471
   0a19086e 69636b73 74657200 00000000 00000000 00000000 000000

                [0] IMPLICIT f-initialize-request SEQUENCE =      a0 80
                {
                  [2] IMPLICIT present-context-management         82 01 00
                    BOOLEAN = false
                  [3] IMPLICIT service-class BIT STRING =         83 02 03
                    '01000'B                          ( management-class )
                  [4] IMPLICIT functional-units BIT STRING =      84 03 05
                    '00000111000'B
                    ( limited-file-management,
                      enhanced-file-management,
                      grouping )
                  [5] IMPLICIT attribute-groups BIT STRING =      85 02 05
                    '100'B                          ( storage )
                  [6] IMPLICIT ftam-quality-of-service            86 01 00
                    INTEGER = no-recovery
                  [7] IMPLICIT contents-type-list SEQUENCE =      a7 80
                  {
                    [APPLICATION 14] IMPLICIT document-type-name  4e 05 28
                      OBJECT IDENTIFIER = {1 0 8571 5 1}
                      (ftam-1)
                    [APPLICATION 14] IMPLICIT document-type-name  4e 05 28
                      OBJECT IDENTIFIER = {1 0 8571 5 2}
                      (ftam-2)
                    [APPLICATION 14] IMPLICIT document-type-name  4e 05 28
                      OBJECT IDENTIFIER = {1 0 8571 5 3}
                      (ftam-3)
                    [APPLICATION 14] IMPLICIT document-type-name  4e 06 2b
                      OBJECT IDENTIFIER = {1 3 9999 1 5 9}
                      (nbs-9)
                  }
                  [APPLICATION 22] IMPLICIT initiator-identity    56 07
                    GRAPHIC STRING = smith
                   filestore-password [APPLICATION 17]         71 0a 19
                    GraphicString GRAPHIC STRING = mypassword
               }
             }
           }
         }
```

```
        }
      }
    }
```

B.1.2. Association Establishment — Responder

The peer FTAM application response indicates that the session connect request is accepted.

```
10:11:58.70 <- Session
   0ee40506 13010016 01021402 00023402 0103c1d2 3180a080 80010100 00a280a5
   80308080 01008102 51010000 30808001 00810251 01000030 80800100 81025101
   00003080 80010081 02510100 00308080 01008102 51010000 30808001 00810251
   01000000 00880206 00890305 40006180 30800201 0ba06761 80a18006 0528c27b
   01010000 a2030201 00a305a1 03020100 be802880 020101a0 3fa18080 02078082
   01008302 03408403 05070085 02058086 0100a780 4e0528c2 7b05014e 062bce0f
   0105094e 0528c27b 05034e05 28c27b05 02000088 01010000 00000000 00000000
   00000000 0000

   accept-spdu                                                      0e e4
       connect/accept-item                                          05 06
           protocol-options  = NULL                                 13 01
           version-number  = 2                                      16 01 02
       session-user-requirements  = '0000000000000010'B             14 02 00
         ( duplex functional unit )
       called-ssap-identifier  =                                    34 02 01
       user-data                                                    c1 d2
```

Presentation Connect Request — Responder

The responder accepts the presentation connection request and notifies the requestor of the status of the negotiated abstract and transfer syntaxes.

```
10:11:58.70 <- Presentation
   3180a080 80010100 00a280a5 80308080 01008102 51010000 30808001 00810251
   01000030 80800100 81025101 00003080 80010081 02510100 00308080 01008102
   51010000 30808001 00810251 01000000 00880206 00890305 40006180 30800201
   0ba06761 80a18006 0528c27b 01010000 a2030201 00a305a1 03020100 be802880
   020101a0 3fa18080 02078082 01008302 03408403 05070085 02058086 0100a780
   4e0528c2 7b05014e 062bce0f 0105094e 0528c27b 05034e05 28c27b05 02000088
   01010000 00000000 00000000 00000000 0000

   cpa-ppdu SET =                                                   31 80
   {
     [0] IMPLICIT SET =                                             a0 80
     {
       [0] IMPLICIT mode-selector INTEGER = normal-mode             80 01 01
     }
     [2] IMPLICIT SEQUENCE =                                        a2 80
     {
       [5] IMPLICIT presentation-context-definition-result-list     a5 80
         SEQUENCE =
       {
         SEQUENCE =                                                 30 80
         {
           [0] IMPLICIT result INTEGER = acceptance                 80 01 00
           [1] IMPLICIT transfer-syntax-name OBJECT IDENTIFIER =    81 02 51
             {2 1 1}
         }
```

```
        SEQUENCE =                                                  30 80
        {
          [0] IMPLICIT result INTEGER = acceptance                  80 01 00
          [1] IMPLICIT transfer-syntax-name OBJECT IDENTIFIER =     81 02 51
            {2 1 1}
        }
        SEQUENCE =                                                  30 80
        {
          [0] IMPLICIT result INTEGER = acceptance                  80 01 00
          [1] IMPLICIT transfer-syntax-name OBJECT IDENTIFIER =     81 02 51
            {2 1 1}
        }
        SEQUENCE =                                                  30 80
        {
          [0] IMPLICIT result INTEGER = acceptance                  80 01 00
          [1] IMPLICIT transfer-syntax-name OBJECT IDENTIFIER =     81 02 51
            {2 1 1}
        }
        SEQUENCE =                                                  30 80
        {
          [0] IMPLICIT result INTEGER = acceptance                  80 01 00
          [1] IMPLICIT transfer-syntax-name OBJECT IDENTIFIER =     81 02 51
            {2 1 1}
        }
        SEQUENCE =                                                  30 80
        {
          [0] IMPLICIT result INTEGER = acceptance                  80 01 00
          [1] IMPLICIT transfer-syntax-name OBJECT IDENTIFIER =     81 02 51
            {2 1 1}
        }
      }
      [8] IMPLICIT presentation-requirements BIT STRING = '00'B     88 02 06
        ( )
      [9] IMPLICIT user-session-requirements BIT STRING =           89 03 05
        '01000000000'B
        ( duplex )
      [APPLICATION 1] IMPLICIT fully-encoded-data SEQUENCE =        61 80
      {
        PDV-list SEQUENCE =                                         30 80
        {
          presentation-context-identifier INTEGER = 11              02 01 0b
          single-asn1-type [0] ANY =                                a0 67

          - Abstract Syntax Name
          -   ACSE-PCI
          - Presentation Context Identifier
          -   11
```

ACSE Association Request Accepted — Responder

The peer application accepts the ACSE association request.

```
10:11:58.70 <- ACSE
   6180a180 060528c2 7b010100 00a20302 0100a305 a1030201 00be8028 80020101
   a03fa180 80020780 82010083 02034084 03050700 85020580 860100a7 804e0528
   c27b0501 4e062bce 0f010509 4e0528c2 7b05034e 0528c27b 05020000 88010100
   00000000 00000000 00000000 000000
          [APPLICATION 1] IMPLICIT aare SEQUENCE =                  61 80
```

```
{
  application-context-name [1]                          a1 80 06
    application-context-name OBJECT IDENTIFIER =
    {1 0 8571 1 1}
  result [2] associate-result INTEGER = accepted        a2 03 02
  result-source-diagnostic [3] acse-service-user [1]    a3 05 a1
    INTEGER INTEGER = null
  [30] IMPLICIT user-information SEQUENCE =             be 80
  {
    IMPLICIT EXTERNAL SEQUENCE =                        28 80
    {
      indirect-reference INTEGER = 1                    02 01 01
      single-asn1-type [0] ANY =                        a0 3f

      - Abstract Syntax Name
      -   FTAM-PCI
      - Presentation Context Identifier
      -   1
```

Initialization Request Accepted — Responder

The peer application accepts the FTAM initialization request by sending an F-INITIALIZE response. If the state and action results are absent, then success is the default.

```
10:11:58.70 <- FTAM
   a1808002 07808201 00830203 40840305 07008502 05808601 00a7804e 0528c27b
   05014e06 2bce0f01 05094e05 28c27b05 034e0528 c27b0502 00008801 01000000
   00000000 00000000 00000000 00
                [1] IMPLICIT f-initialize-response SEQUENCE =     a1 80
                {
                  [0] IMPLICIT protocol-version BIT STRING =      80 02 07
                    '1'B
                    ( version-1 )
                  [2] IMPLICIT present-context-management         82 01 00
                    BOOLEAN = false
                  [3] IMPLICIT service-class BIT STRING =         83 02 03
                    '01000'B
                    ( management-class )
                  [4] IMPLICIT functional-units BIT STRING =      84 03 05
                    '00000111000'B
                    ( limited-file-management,
                      enhanced-file-management,
                      grouping )
                  [5] IMPLICIT attribute-groups BIT STRING =      85 02 05
                    '100'B
                    ( storage )
                  [6] IMPLICIT ftam-quality-of-service            86 01 00
                    INTEGER = no-recovery
                  [7] IMPLICIT contents-type-list SEQUENCE =      a7 80
                  {
                    [APPLICATION 14] IMPLICIT document-type-name  4e 05 28
                       OBJECT IDENTIFIER = {1 0 8571 5 1}
                       (ftam-1)
                    [APPLICATION 14] IMPLICIT document-type-name  4e 06 2b
                       OBJECT IDENTIFIER = {1 3 9999 1 5 9}
                       (nbs-9)
                    [APPLICATION 14] IMPLICIT document-type-name  4e 05 28
                       OBJECT IDENTIFIER = {1 0 8571 5 3}
```

```
                        (ftam-3)
                    [APPLICATION 14] IMPLICIT document-type-name  4e 05 28
                       OBJECT IDENTIFIER = {1 0 8571 5 2}
                        (ftam-2)
                  }
                  [8] IMPLICIT checkpoint-window INTEGER = 1      88 01 01
               }
             }
           }
         }
       }
     }
   }
```

Passing User Data — Initiator

Session and presentation protocol data units (PDUs) carry the FTAM PDUs.

```
10:11:59.05 -> Session
   01000100 61803080 020101a0 07b68080 01030000 00003080 020101a0 19a68073
   80a08019 07657861 6d706c65 00000000 43020002 00000000 30800201 01a01db0
   806880a0 80190f72 656e616d 65645f65 78616d70 6c650000 00000000 00003080
   020101a0 04a88000 00000030 80020101 a004b880 00000000 0000

   data-spdu                                                       01 00
   give-tokens-spdu                                                01 00

10:11:59.05 -> Presentation
   61803080 020101a0 07b68080 01030000 00003080 020101a0 19a68073 80a08019
   07657861 6d706c65 00000000 43020002 00000000 30800201 01a01db0 806880a0
   80190f72 656e616d 65645f65 78616d70 6c650000 00000000 00003080 020101a0
   04a88000 00000030 80020101 a004b880 00000000 0000

   [APPLICATION 1] IMPLICIT fully-encoded-data SEQUENCE =          61 80
   {
     PDV-list SEQUENCE =                                           30 80
     {
       presentation-context-identifier INTEGER = 1                 02 01 01
       single-asn1-type [0] ANY =                                  a0 07

       - Abstract Syntax Name
       -   FTAM-PCI
       - Presentation Context Identifier
       -   1
```

FTAM PDUs Grouping

The FTAM PDUs are packaged inside one P-DATA through grouping by the F-BEGIN-GROUP and F-END-GROUP primitives. The virtual filestore actions requested are selecting a file, renaming the file, and deselecting the file.

```
10:11:59.05 -> FTAM
   b6808001 03000000 00308002 0101a019 a6807380 a0801907 6578616d 706c6500
   00000043 02000200 00000030 80020101 a01db080 6880a080 190f7265 6e616d65
   645f6578 616d706c 65000000 00000000 00308002 0101a004 a8800000 00003080
   020101a0 04b88000 00000000 00

       [22] IMPLICIT f-begin-group-request SEQUENCE =              b6 80
```

```
      {
        [0] IMPLICIT threshold INTEGER = 3                        80 01 03
      }
    }
    PDV-list SEQUENCE =                                           30 80
    {
      presentation-context-identifier INTEGER = 1                 02 01 01
      single-asn1-type [0] ANY =                                  a0 19

      - Abstract Syntax Name
      -   FTAM-PCI
      - Presentation Context Identifier
      -   1

10:11:59.05 -> FTAM
   a6807380 a0801907 6578616d 706c6500 00000043 02000200 00000030 80020101
   a01db080 6880a080 190f7265 6e616d65 645f6578 616d706c 65000000 00000000
   00308002 0101a004 a8800000 00003080 020101a0 04b88000 00000000 00
      [6] IMPLICIT f-select-request SEQUENCE =                    a6 80
      {
        [APPLICATION 19] IMPLICIT attributes SEQUENCE =           73 80
        {
          [0] IMPLICIT select-attributes SEQUENCE =               a0 80
          {
            filename-attribute GRAPHIC STRING = example           19 07
          }
        }
        [APPLICATION 3] IMPLICIT requested-access BIT STRING =    43 02 00
          '00000010'B
          ( change-attributes )
      }
    }
    PDV-list SEQUENCE =                                           30 80
    {
      presentation-context-identifier INTEGER = 1                 02 01 01
      single-asn1-type [0] ANY =                                  a0 1d

      - Abstract Syntax Name
      -   FTAM-PCI
      - Presentation Context Identifier
      -   1

10:11:59.05 -> FTAM
   b0806880 a080190f 72656e61 6d65645f 6578616d 706c6500 00000000 00000030
   80020101 a004a880 00000000 30800201 01a004b8 80000000 000000
      [16] IMPLICIT f-change-attributes-request SEQUENCE =        b0 80
      {
        [APPLICATION 8] IMPLICIT attributes SEQUENCE =            68 80
        {
          [0] IMPLICIT filename SEQUENCE =                        a0 80
          {
            filename-attribute GRAPHIC STRING = renamed_example   19 0f
          }
        }
      }
    }
    PDV-list SEQUENCE =                                           30 80
    {
```

```
       presentation-context-identifier INTEGER = 1                 02 01 01
       single-asn1-type [0] ANY =                                  a0 04

       - Abstract Syntax Name
       -   FTAM-PCI
       - Presentation Context Identifier
       -   1

10:11:59.05 -> FTAM
  a8800000 00003080 020101a0 04b88000 00000000 00
       [8] IMPLICIT f-deselect-request SEQUENCE =                  a8 80
      {
      }
    }
    PDV-list SEQUENCE =                                           30 80
    {
      presentation-context-identifier INTEGER = 1                 02 01 01
      single-asn1-type [0] ANY =                                  a0 04

      - Abstract Syntax Name
      -   FTAM-PCI
      - Presentation Context Identifier
      -   1

10:11:59.05 -> FTAM
  b8800000 00000000
      [24] IMPLICIT f-end-group-request SEQUENCE =                b8 80
      {
      }
    }
  }
```

B.1.3. Passing User Data — Responder

Session and presentation protocol data units (PDUs) carry the FTAM PDUs.

```
10:11:59.42 <- Session
   01000100 61803080 020101a0 04b78000 00000030 80020101 a028a780 7380a080
   191a2f75 73722f75 73657273 2f76696e 63656e74 2f657861 6d706c65 00000000
   00000000 30800201 01a01db1 806880a0 80190f72 656e616d 65645f65 78616d70
   6c650000 00000000 00003080 020101a0 04a98000 00000030 80020101 a004b980
   00000000 0000

   data-spdu                                                      01 00
   give-tokens-spdu                                               01 00

10:11:59.42 <- Presentation
   61803080 020101a0 04b78000 00000030 80020101 a028a780 7380a080 191a2f75
   73722f75 73657273 2f76696e 63656e74 2f657861 6d706c65 00000000 00000000
   30800201 01a01db1 806880a0 80190f72 656e616d 65645f65 78616d70 6c650000
   00000000 00003080 020101a0 04a98000 00000030 80020101 a004b980 00000000
   0000

   [APPLICATION 1] IMPLICIT fully-encoded-data SEQUENCE =          61 80
   {
     PDV-list SEQUENCE =                                           30 80
     {
       presentation-context-identifier INTEGER = 1                 02 01 01
```

```
      single-asn1-type [0] ANY =                                  a0 04

      - Abstract Syntax Name
      -   FTAM-PCI
      - Presentation Context Identifier
      -   1
```

Sending Responses to Requests — Responder

The FTAM responder sends one response for each of the requests that the initiator sent. Each response must be successful or the whole group fails. Since the state and action results are not present, the default of success is assumed.

```
10:11:59.42 <- FTAM
   b7800000 00003080 020101a0 28a78073 80a08019 1a2f7573 722f7573 6572732f
   76696e63 656e742f 6578616d 706c6500 00000000 00000030 80020101 a01db180
   6880a080 190f7265 6e616d65 645f6578 616d706c 65000000 00000000 00308002
   0101a004 a9800000 00003080 020101a0 04b98000 00000000 00

      [23] IMPLICIT f-begin-group-response SEQUENCE =             b7 80
      {
      }
    }
    PDV-list SEQUENCE =                                           30 80
    {
      presentation-context-identifier INTEGER = 1                 02 01 01
      single-asn1-type [0] ANY =                                  a0 28

      - Abstract Syntax Name
      -   FTAM-PCI
      - Presentation Context Identifier
      -   1

10:11:59.42 <- FTAM
   a7807380 a080191a 2f757372 2f757365 72732f76 696e6365 6e742f65 78616d70
   6c650000 00000000 00003080 020101a0 1db18068 80a08019 0f72656e 616d6564
   5f657861 6d706c65 00000000 00000000 30800201 01a004a9 80000000 00308002
   0101a004 b9800000 00000000
     [7] IMPLICIT f-select-response SEQUENCE =                   a7 80
       {
       [APPLICATION 19] IMPLICIT attributes SEQUENCE =           73 80
       {
         [0] IMPLICIT select-attributes SEQUENCE =               a0 80
         {
           filename-attribute GRAPHIC STRING =                   19 1a
           /usr/users/smith/example
         }
       }
     }
   }
   PDV-list SEQUENCE =                                           30 80
   {
     presentation-context-identifier INTEGER = 1                 02 01 01
     single-asn1-type [0] ANY =                                  a0 1d

     - Abstract Syntax Name
     -   FTAM-PCI
     - Presentation Context Identifier
```

```
     -   1

10:11:59.42 <- FTAM
   b1806880 a080190f 72656e61 6d65645f 6578616d 706c6500 00000000 00000030
   80020101 a004a980 00000000 30800201 01a004b9 80000000 000000
       [17] IMPLICIT f-change-attributes-response SEQUENCE =       b1 80
       {
         [APPLICATION 8] IMPLICIT attributes SEQUENCE =            68 80
         {
           [0] IMPLICIT filename SEQUENCE =                        a0 80
           {
             filename-attribute GRAPHIC STRING = renamed_example   19 0f
           }
         }
       }
     }
     PDV-list SEQUENCE =                                           30 80
     {
       presentation-context-identifier INTEGER = 1                 02 01 01
       single-asn1-type [0] ANY =                                  a0 04

       - Abstract Syntax Name
       -   FTAM-PCI
       - Presentation Context Identifier
       -   1

10:11:59.42 <- FTAM
   a9800000 00003080 020101a0 04b98000 00000000 00

       [9] IMPLICIT f-deselect-response SEQUENCE =                 a9 80
       {
       }
     }
     PDV-list SEQUENCE =                                           30 80
     {
       presentation-context-identifier INTEGER = 1                 02 01 01
       single-asn1-type [0] ANY =                                  a0 04

       - Abstract Syntax Name
       -   FTAM-PCI
       - Presentation Context Identifier
       -   1

10:11:59.42<- FTAM
   b9800000 00000000
       [25] IMPLICIT f-end-group-response SEQUENCE =               b9 80
       {
       }
     }
   }
```

Association Termination — Initiator

The initiator requests the termination of the FTAM regime. Session sends a `finish-spdu`, ACSE sends an association release request, and FTAM sends an F-TERMINATE request.

```
10:11:59.53 -> Session
   092a1101 01c12561 80308002 010ba018 62808001 00be8028 80020101 a004a280
```

```
  00000000 00000000 00000000
  finish-spdu                                                    09 2a
      transport-disconnect  = '00000001'B                        11 01 01
          ( transport connection is released )
      user-data                                                  c1 25

10:11:59.53 -> Presentation
  61803080 02010ba0 18628080 0100be80 28800201 01a004a2 80000000 00000000
  00000000 00
  [APPLICATION 1] IMPLICIT fully-encoded-data SEQUENCE =         61 80
  {
    PDV-list SEQUENCE =                                          30 80
    {
      presentation-context-identifier INTEGER = 11               02 01 0b
      single-asn1-type [0] ANY =                                 a0 18

      - Abstract Syntax Name
      -   ACSE-PCI
      - Presentation Context Identifier
      -   11

10:11:59.53 -> ACSE
  62808001 00be8028 80020101 a004a280 00000000 00000000 00000000
      [APPLICATION 2] IMPLICIT rlrq-ppdu SEQUENCE =              62 80
      {
        [0] IMPLICIT reason INTEGER = normal                     80 01 00
        [30] IMPLICIT user-information SEQUENCE =                be 80
        {
          IMPLICIT EXTERNAL SEQUENCE =                           28 80
          {
            indirect-reference INTEGER = 1                       02 01 01
            single-asn1-type [0] ANY =                           a0 04

            - Abstract Syntax Name
            -   FTAM-PCI
            - Presentation Context Identifier
            -   1

10:11:59.53 -> FTAM
  a2800000 00000000 00000000 0000
            [2] IMPLICIT f-terminate-request SEQUENCE =          a2 80
            {
            }
          }
        }
      }
    }
```

Association Termination — Responder

The responder sends a response for each of the initiator's requests. Session sends a `disconnect-spdu`, ACSE sends an association release response, and FTAM sends an F-TERMINATE response.

```
10:11:59.65 <- Session
  0a27c125 61803080 02010ba0 18638080 0100be80 28800201 01a004a3 80000000
  00000000 00000000 00
  disconnect-spdu                                                0a 27
      user-data                                                  c1 25
```

```
10:11:59.65 <- Presentation
  61803080 02010ba0 18638080 0100be80 28800201 01a004a3 80000000 00000000
  00000000 00
   [APPLICATION 1] IMPLICIT fully-encoded-data SEQUENCE =          61 80
   {
     PDV-list SEQUENCE =                                           30 80
     {
       presentation-context-identifier INTEGER = 11                02 01 0b
       single-asn1-type [0] ANY =                                  a0 18

       - Abstract Syntax Name
       -   ACSE-PCI
       - Presentation Context Identifier
       -   11

10:11:59.65 <- ACSE
  63808001 00be8028 80020101 a004a380 00000000 00000000 00000000
      [APPLICATION 3] IMPLICIT rlre-ppdu SEQUENCE =               63 80
      {
        [0] IMPLICIT reason INTEGER = normal                      80 01 00
        [30] IMPLICIT user-information SEQUENCE =                 be 80
        {
          IMPLICIT EXTERNAL SEQUENCE =                            28 80
          {
            indirect-reference INTEGER = 1                        02 01 01
            single-asn1-type [0] ANY =                            a0 04

            - Abstract Syntax Name
            -   FTAM-PCI
            - Presentation Context Identifier
            -   1

10:11:59.65 <- FTAM
  a3800000 00000000 00000000 0000
            [3] IMPLICIT f-terminate-response SEQUENCE =          a3 80
            {
            }
          }
        }
      }
    }

10:11:59.77     OSI trace ended Wed Jan 30 10:11:59 1994
```